160D-9L / 180D-9B

Performance Enhanced For Tier-4 Final

MOVING YOU FURTHER

HYUNDAI MATERIAL HANDLING

Some of the photos may include optional equipment.

HYUNDAI MATERIAL HANDLING

ELEVEX™ Material Handling Solutions

Your satisfaction is **our priority!**

Hyundai introduces a new line of 9-series diesel forklift trucks.
The newly designed four wheel counterbalance trucks provide operators increased comfort, productivity and ease of maintenance.

An ideal arrangement of components
ensures easy access and convenience for maintenance.

160D-9L
180D-9B

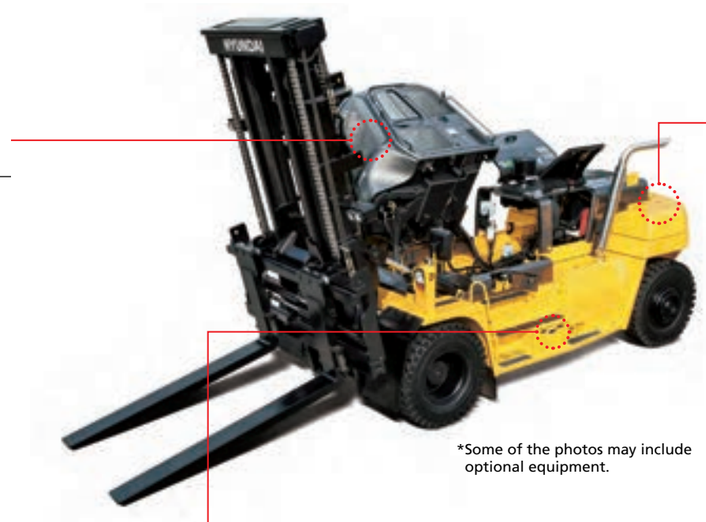

*Some of the photos may include optional equipment.

Rear View Camera
Rear view camera improves site and pedestrian safety. Display supports up to four cameras.

Hi-mate (Remote Management System)
Hi-mate, Hyundai's proprietary remote management system, provides operators and dealer service personnel access to vital service and diagnostic information on the machine from any computer with internet access.

Master Switch
A master switch disconnects the battery power to protect the electrical system from excess electrical drainage.

Mast Specification

Mast Type		Overall Height (Lowered)		Maximum Fork Height		Free Lift Height		Tilt Angle		Load Capacity		Truck Weight (Unloaded)
								Fwd	Bwd	180D-9B	160D-9L	
										36 in LC	48 in LC	
		in	mm	in	mm	in	mm	deg	deg	lb	lb	lb
2-STAGE LIMITED FREE LIFT	V300	126.0	3,200	118.9	3,020	0	0	10	10	40,000	36,000	52809
	V330	131.9	3,350	130.7	3,320	0	0	10	10	40,000	36,000	53037
	V350	135.8	3,450	138.6	3,520	0	0	10	10	40,000	36,000	53194
	V400	145.7	3,700	158.3	4,020	0	0	10	10	40,000	36,000	53672
	V450	155.5	3,950	178.0	4,520	0	0	10	10	40,000	36,000	54188
	V500	165.4	4,200	197.6	5,020	0	0	10	10	40,000	36,000	54599
	V550	175.2	4,450	217.3	5,520	0	0	10	10	40,000	35,200	55162
	V600	185.0	4,700	237.0	6,020	0	0	10	10	39,400	34,760	55573
	V650	194.9	4,950	256.7	6,520	0	0	10	10	38,800	34,210	55979
	V700	204.7	5,200	276.4	7,020	0	0	10	10	38,200	33,770	56390
3-STAGE FULL FREE LIFT	TS460	116.1	2,950	182.4	4,634	61	1,538	10	10	40,000	36,000	55213
	TS508	122.0	3,100	200.2	5,084	66	1,688	10	10	39,000	34,320	55644
	TS538	126.0	3,200	212.0	5,384	70	1,788	10	10	38,500	33,880	55896
	TS568	129.9	3,300	223.8	5,684	74	1,888	10	10	38,100	33,550	56146
	TS600	134.6	3,420	238.0	6,044	79	2,008	10	10	37,500	33,220	56388
	TS658	141.7	3,600	259.2	6,584	86	2,188	10	10	36,900	32,670	56792
	TS700	147.6	3,750	276.9	7,034	92	2,338	10	10	36,200	32,120	57335

*: standard

Fast and Easy **Maintenance**

Some of the photos may include optional equipment.

Large Engine Hood
Highly accessible engine compartment assures fast and efficient maintenance.

Hydraulic Cabin Tilt
Cabin tilting system makes servicing of power train components quick and easy. An electrically assisted hydraulic actuated cylinder tilts operator cabin to left side about 53 degrees for easy access to inside of truck components.

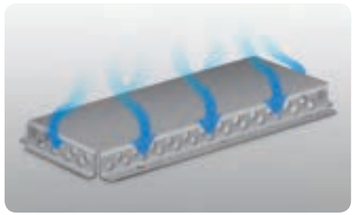

Cabin Air Filter
Positive internal pressure is maintained to slightly higher than that of outside cabin to reduce dust and noise levels.

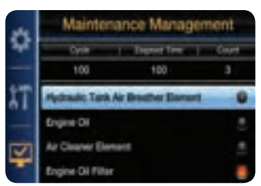

Maintenance Management
Integrated with Hi-Mate to track service intervals to properly maintain machine.

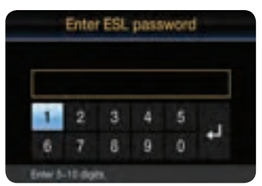

Engine Start Limit

Integrated shaft type carriage

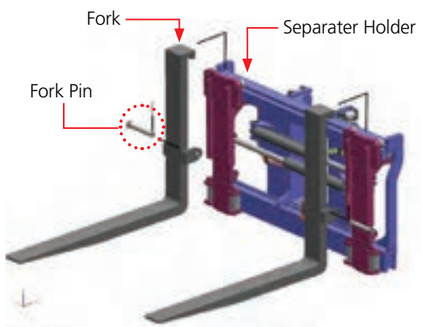

Separator Holder Type Fork Carriage (Optional)
To improve handling and easily switch forks and other attachment Separator holder system is adopted as option. It is possible to install various attachments like coil ram easily.

New Diesel Forklift with Proven Quality and Advanced Technology

- Maximum Performance
- Spacious Operator's cab
- Load Weight Indicator
- OPSS System for Safe Operation
- Easy Serviceability
- Hi-mate (Remote Managegement System)
- 4.3 Inch Color LCD Display
- FATC (Full Automatic Temperature Control) Air Conditioner

Some of the photos may include optional equipment.

High Efficiency &
Optimal Performance

The safely designed driver's space makes your operating more comfortable.

160D-9L
180D-9B

Some of the photos may include optional equipment.

Cummins QSB6.7 Engine
163 hp/2,300rpm
540 lbf-ft/1,500rpm

Powerful Engine
The six cylinder turbo-charged engine is built for power, reliability and economy. This engine meets EPA Tier 4 Final and EU stage Ⅳ emission regulation.

Excellent Fuel Efficiency
Improved fuel consumption rate over previous engine technology

DOC (Diesel Oxidation Catalyst)

SCR (Selective Catalytic Reduction)

EGR (Exhaust Gas Recirculation)

VGT™ Variable Geometry Turbocharger
- High torque at low speeds
- Excellent transient behavior

OPSS
(Operator Presence Sensing System)

When operator is not in seat the hydraulic lift and tilt controls and travel are locked out.

Lift Lock Tilt Lock Drive Lock

Some of the photos may include optional equipment.

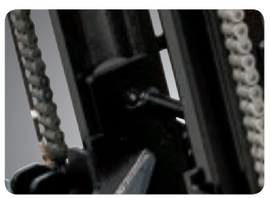

Highly Durable Mast & Carriage Side Roller
Side roller with great durability for mast and carriage is included.

Highly Durable Carriage
The carriage is assembled from high tensile structural steel resulting in excellent durability. Work in narrow aisles with ease as the width of carriage is narrower than the overall width of the machine.

Excellent Night Work
- Various work lamp positions provide the operator a more comfortable and safer work environment.
- Front : fender (2), mast (4)
- Rear : cab (2)
- LED Rear Combination Lamp

Advanced **Safety**

Engine Control Mode
Engine performance can be tailored to operation needs with selector switch.
STD Mode : Fuel reduction mode for light to medium-duty operating load
POWER Mode : Heavy-duty or operation on slope

Adjustable Engine Low Idle RPM
While engine runs, low idle rpm can be increased by units of 25 rpm and it retains previously set rpm when engine restarts.

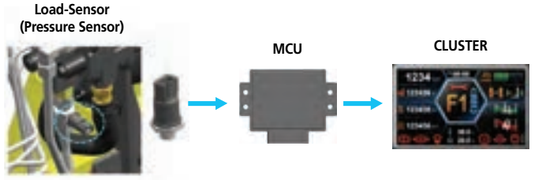

Load Weight Indicator
The Load Weight Indicator displays the load weight on the monitor. The load sensor reduces the time to check loaded weight and an alarm alerts the driver when overloaded.

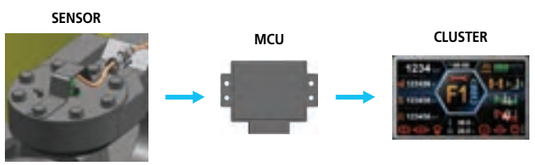

Rear Wheel Angle Monitoring
- indicates steering wheel angle for easy operation
- Real-time steering wheel angle is displayed for increased operator safety and productivity

Advanced Cooling System with Reversible Fan
Reduced fuel consumption by utilizing an electronically controlled, reversible hydraulic fan. Fan speed based on transmission, coolant and hydraulic temperatures.

Rear Tire Cover
Equipped to help prevent clogging of radiator by site materials.

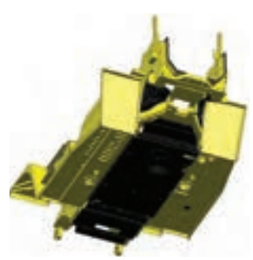

Under Cover (Optional)
This cover protects engine and components from operation site debris. Helps extend component life

Powerful engine and high technology systems provide you with enhanced performance and highest productivity.

160D-9L
180D-9B

Full-automatic Transmission
Full-automatic transmission gives easy, convenient handling and soft, smooth shifting. The operator can select two kinds of automatic modes. (1st↔3rd, 2nd↔3rd)

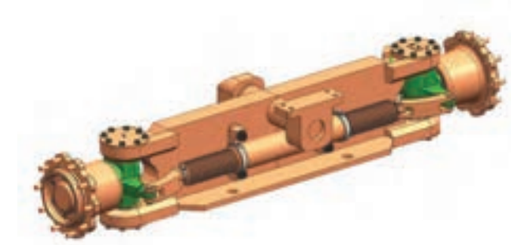

Fully Hydrostatic Power Steering
The hydraulic steering system always guarantees smooth and flexible steering, preventing over-run and kick-back.

Load Sensing Hydraulic System
Provides hydraulic oil flow only when needed to operate function. Reduces load on engine, when not needed, resulting in reduced fuel consumption and greenhouse gas emissions. (No excessive flow)

Durable drive axle
The hypoid type planetary reduction drive axle smoothly delivers desired torque to the drive wheels.

Wet Disc Brake System
The wet disc brake system is virtually maintenance free and the enclosed design protects from dust and water.

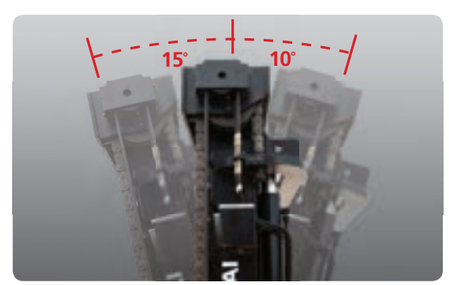

Increased Mast Tilting Angle
Utilizing the mast tilting angle of 15 degrees forward and 10 degrees backward, the operator can perform loading and unloading jobs safely and rapidly.

Max.Gradeability (loaded)

Model	%
160D-9L / 180D-9B	33

Max.Travel Speed (Unloaded)

Model	mph
160D-9D / 180L-9B	21.8

Faster Travel Speed & Better Gradability
The powerful engine provides greater acceleration, better gradability and faster travel speed on any tough terrains or slopes.

Best Convenience&
Optimised Ergonomics

The ergonomically designed cabin provides full support and comfort to the operator.

160D-9L
180D-9B

Some of the photos may include optional equipment.

Spacious Operator Cabin

The newly designed cabin was conceived for more space, a wider field of view and operator comfort.

MP3 Player

Bluetooth Hands Free Remote Control Socket

Centralized Instrument Switch Panel

Luxury (Leather, Heat) Seat (Optional)

An attractive and adjustable ergonomically designed seat provides great comfort, safety and durability.

New Design Cluster

1	Parking Brake Lamp	2	Check Engine Lamp	3	High beam indicator lamp
4	Operator presence indicator lamp	5	Seat belt warning lamp	6	Hour meter
7	Odometer	8	Outside temperature indicator	9	Air-con setting temp. indicator
10	Machine Incline / Slope Indicator	11	Transmission oil temperature gauge	12	Fuel gauge
13	Engine coolant temperature gauge	14	Right turn signal indicator lamp	15	Mast tilt angle indicator (optional)
16	Rear Wheel Angle Indicator	17	DEF level gauge	18	T/M information display
19	Clock	20	Load weight indicator	21	Tachometer
22	Left turn signal indicator lamp	23	Speedometer		

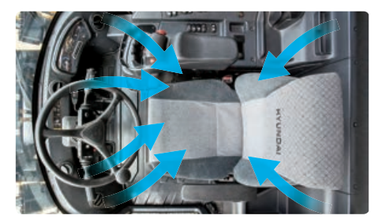

High-output Air Conditioner & Heater

A high-output air conditioner and heater with multiple air vent positions mounted front and rear to increase room in the cab. The new climate controller heater and air conditioner provides high output to quickly heat or cool, and then maintain the desired comfort level of the operator.

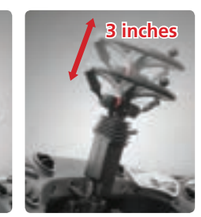

Adjustable Steering Column

Steer wheel tilt angle and column height adjustable for operator comfort.

Fingertip Control

Ergonomically designed fingertip control levers increase operator comfort and productivity.

Dimension

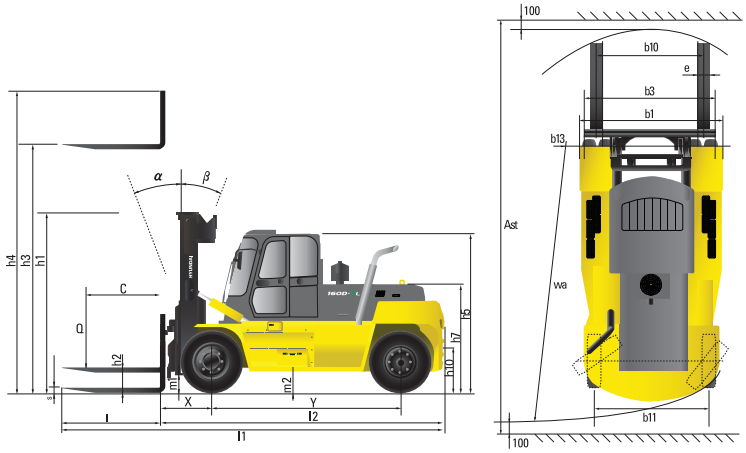

Load Capacity

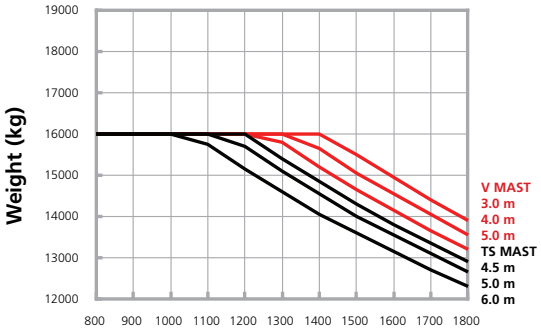

160D-9L Load Center (mm)

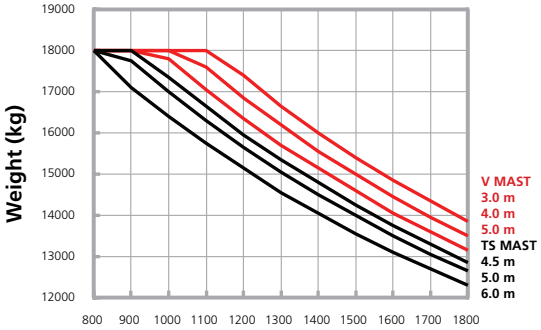

180D-9B Load Center (mm)

Optional Items

- **Fork (L) (mm) :** 1800, 2000, 2450, 3150
- **MAST :** Simplex Mast / Triplex Mast
- **MCV :** 3-Spool / 4-Spool / 5-Spool, Finger tip
- **Sliding Carriage**
- **Separator Holder Type Fork Carriage**
- **Seat :** Air Suspension Seat, Heat, Leather
- **Beacon Lamp (LED)**
- **BIAS / RADIAL Tire**

Specification

Identification				
1. 1	Manufacturer		Hyundai	
1. 2	Manufacturer's type designation		160D-9L	180D-9B
1. 3	Drive : electric (battery or mains) , diesel, petrol ,fuel gas, manual		DIESEL	DIESEL
1. 4	Type of operation : hand, pedestrian, standing, seated, order - picker		seated	seated
1. 5	Load capacity / rated load	lb	36,000	40,000
1. 6	Load center distance	c in	48	36
1. 8	Load distance, center of drive axle to fork	x in	39.3	39.3
1. 9	Wheelbase	y in	147.6	147.6
Weights				
2. 1	Service weight	lb	52,810	52,810
2. 2	Axle loading, loaded front / rear	lb	82,559 / 5,525	86,379 / 6,113
2. 3	Axle loading , unloaded front / rear	lb	26,599 / 26,209	26,599 / 26,209
Wheels, Chassis				
3. 1	Tire		Pneumatic	Pneumatic
3. 2	Tires size, front (ø x width)		12.00-20-20PR	12.00-20-20PR
3. 3	Tires size, rear (ø x width)		12.00-20-20PR	12.00-20-20PR
3. 5	Wheels, number front rear (x = driven wheels)		4 x 2	4 x 2
3. 6	Track width, front	in	73.2	73.2
3. 7	Track width, rear	in	80	80
Basic Dimensions				
4. 1	Mast tilt forward/backward with 2-stage mast	degrees	15 / 10	15 / 10
4. 2	Lowered mast height	h1 in	126	126
4. 3	Free lift height	h2 in	0	0
4. 4	Lift height	h3 in	119	119
4. 5	Extended mast height	h4 in	183.5	183.5
4. 7	Overhead guard (cab) height	h5 in	121	121
4. 8	Seat height / Standing height	h7 in	75	75
4. 12	Coupling height	h10 in	24	24
4. 19	Overall length	l1 in	315.5	315.5
4. 20	Length to face of forks	l2 in	219	219
4. 21	Overall width	b1 in	100	100
4. 22	Fork dimensions	s / e / l in	3.9 x 9.8 x 96.5	3.9 x 9.8 x 96.5
4. 24	Fork - carriage width	b3 in	100	100
4. 31	Ground clearance, loaded, under mast	m1 in	9.6	9.6
4. 32	Ground clearance, centre of wheelbase	m2 in	15	15
4. 33	Aisle width for pallets 1,000 x 1,200 crossways	Ast in	350.5	350.5
4. 34	Aisle width for pallets 800 x 1,200 lengthways	Ast in	350.5	350.5
4. 35	Turning radius	Wa in	205.5	205.5
4. 36	Smallest pivot point distance	in	80.6	80.6
Performance Data				
5. 1	Travel Speed, Unloaded	mph	21.8	21.8
5. 2	Lift Speed, Loaded/ Unloaded	in/s	13 / 17.7	11.4 / 17.7
5. 3	Lowering Speed, Loaded/Unloaded	in/s	16.9 / 15.3	16.9 / 15.3
5. 6	Drawbar Pull, Loaded	KN	134,518 / 131,477	134,518 / 131,477
5. 7	Gradient Performance, Loaded	%	33 / 30.4	33 / 30.4
5. 10	Service Brake		Hydraulic	Hydraulic
Engine				
7. 1	Engine Manufacturer / Type		Cummins QSB6.7	Cummins QSB6.7
7. 2	Engine Power Acc. To Iso 1585	HP	163	163
7. 3	Rated Speed	1/min	2,300	2,300
7. 4	No. Of Cylinder / Cubic Capacity	/ft³	6 / 6,690	6 / 6,690
7. 5	Fuel Consumption Acc. to Vdi Cycle	gal/h	3.2	3.2
Other Details				
8. 1	Type of drive control		Power Shift	Power Shift
8. 2	Operating pressure for attachments (system/attach)	psi	3,335.8 / 2,393	3,335.8 / 2,393
8. 3	Oil volume for attachments	gal/min	53.6	53.6
8. 4	Sound level at driver's ear according to DIN 12 053	dB	71.2	71.2

* Standard and optional equipment may vary. Contact your Hyundai dealer for more information.
* The machine may vary according to International standards.
* The photos may include attachments and optional equipment that are not available in your area.

ELEVEX™ Material Handling Solutions

MONTREAL (Head office)
19151 A, Cruickshank Avenue
Baie-D'Urfé (Québec) H9X 3N9

Phone: 418 694-4223
Toll free: 1 866 421-4223
info@elevex.ca

SAGUENAY
2305, Alexis-Le-Trotteur
St. Jonquière (Québec) G7X 9H8

elevex.ca

HYUNDAI MATERIAL HANDLING

2018.04 Rev.2