25/30D 35DN-9V

5,000 / 6,000 / 7,000 lb. capacities

Diesel · Pneumatic Tire

HYUNDAI
MATERIAL HANDLING
NO ONE DELIVERS MORE

ELEVEX™
Material Handling Solutions

MORE POWER.
MORE EFFICIENCY.
MORE VALUE TO LIFT YOUR ENTIRE BUSINESS.

Get more of what you're looking for:
THE 9V SERIES FROM HYUNDAI

Engineered to handle the toughest jobs in the most extreme conditions, the 9V Series brings you a powerful, eco-friendly Hyundai diesel engine that meets the nation's toughest emission standards. But strength with lower emissions is only one advantage. More performance, more convenience, simplified maintenance, and enhanced ergonomics all add up to workhorse machines that can loweryour costs while raising your profits.

Reliability, durability, economy, that's what you'll find in the innovative 9V Series from Hyundai.

EFFICIENT, LOW EMISSION HYUNDAI-BUILT DIESEL

The powerful Hyundai DM02 diesel delivers superior performance with high torque at lower rpms, all while meeting EPA/CARB Tier 4 regulations. It also brings you:

- Advanced BOSCH common rail fuel system with Electronic Engine Control Unit for greater efficiency
- Hydraulic Lash Adjustor (HLA) eliminates costly valve clearance checks while delivering quieter operation and longer engine life
- Simplified maintenance with remote type oil filter cuts downtime and operating costs

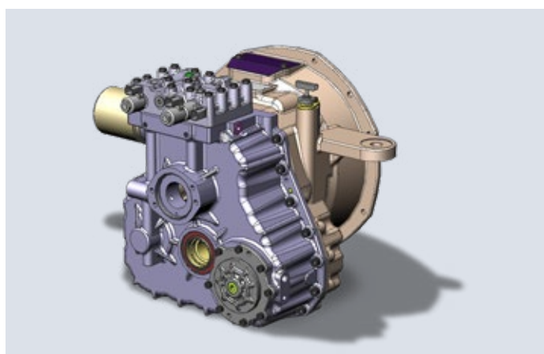

INNOVATIVE HYUNDAI-BUILT TRANSMISSION

Engineered by Hyundai to be a perfect match to our high performance engine, the new transmission provides smoother, reliable operation and so much more:

- Clutch pack capacity and oil volume increased to help protect against wear and heat damage
- Advanced Direction Change Shock Relief (DCSR) is precisely managed by the Master Control Unit (MCU) and reduces wear & tear and forward/reverse starting shock by 36%
- Auto parking brake engages if the operator leaves the seat or if the key is turned off

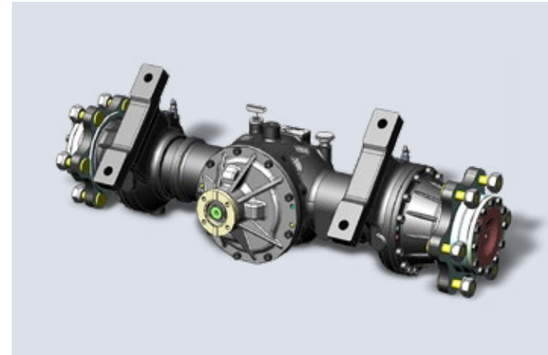

RUGGED HYUNDAI DRIVE AXLEE

This advanced, rugged system is designed for years of reliable service. Noise is reduced thanks to an innovative ring gear incorporated in the hub reduction system. Durability is improved through the added strength of the gears composing the bevel, pinion, and differential assembly. In addition, the wet disc brakes offer smoother response and more consistent braking with reduced maintenance intervals.

LARGE, INFORMATION RICH DIGITAL CLUSTER

Our multi-function cluster puts essential information right in front of your operators. Fully integrated with the MCU (Master Control Unit), the new cluster comes standard with maintenance alarms, operational indicators, and safety alerts, including incline/slope warnings, load weight indicator, and OPSS (Operator Presence Sensing System). It also offers ready access to the auto park brake and Direction Change Shock Relief.

The 9V Series brings you even more advantages.

- Outstanding maneuverability and with our optional 3-stage mast greater visibility all around the workplace
- A full suspension Grammer seat, hanging-type pedals, and easy handling steering wheel for operator comfort
- Optional heated cab redesigned for improved visibility and comfort, while shielding operatorsfrom the environment and can include an optional air conditioner
- Easy access to key maintenance areas with a floor plate and side cover that can be removed without tools and a hood supported by two gas struts. With the 9V Series cluster, engine status and issues can be checked without the need for a separate diagnostic tool
- Fuses and relays are protected in a box with enhanced water-proof and dustproof protection
- New German engineered Buchholz monoblock Main Control Valve (MCV) for improved control of hydraulic functions and fuel efficiency
- Operator Presence Sensing System (OPSS) restricts driving, lift, and tilting whenever the operator leaves the seat
- For maximum safety the auto parking brake is activated when the engine stops or the OPSS detects a fault
- The Hill Assist Control engages the auto parking brake when the forklift stops while climbing a slope or grade such as a ramp
- The Load Weight Indicator provides a digital readout of the load weight and warns if the maximum capacity is exceeded
- Optional seat belt interlock system restricts forklift operation when the seat belt is not fastened or the operator releases the belt while driving for even greater safety
- Hanging pedal design reduces operator fatigue while enhancing driving precision and can include an optional hydraulic boost brake pedal
- The small diameter of the steering wheel improves handling while also reducing the effort required to navigate the forklift

HI-MATE MANAGEMENT SYSTEM

Hi-Mate is simply the industry's best remote management system. With continuous data collection, Hi-Mate delivers more communication, control, and ability to track, monitor, maintain, and manage your forklift fleet. It is the proven way to coordinate both your equipment and human resources.

ONLY HYUNDAI OFFERS YOU SUCH A COMPREHENSIVE, FULLY INTEGRATED TELEMATICS SYSTEM.

Data collected at the sensors and modules mounted on equipment during the operation of forklift truck at the operation control system of Hyundai Industrial Vehicle is provided to the mobile device or computer of the customer in real time through the server of Hyundai Construction Equipment. Such visual data can be used for establishing a control plan for safety control in fields, productivity improvement, and cost saving.

Equipment operation management

Real-time monitoring and follow-up management of individual vehicles, drivers, equipment on-site, and operation information

- Key-on time, travel hours, work hours, and traveling position

Equipment status management

Supplying vital diagnostic information of the forklift linked with operation hours, establishing a follow-up management plan

- Indicating fuel level failure information
- Indicating filter change timing, PM schedule

Safe traveling control

Impact monitor provides alerts, accountability, and follow-up management of safety incidents involving equipment during operation

- Count number and severity of impact incidents

Human resource management

Checking and follow-up management including functions such as OSHA required pre-shift check list

- Driver authorization, self-diagnosis of equipment conditions

Data Flow

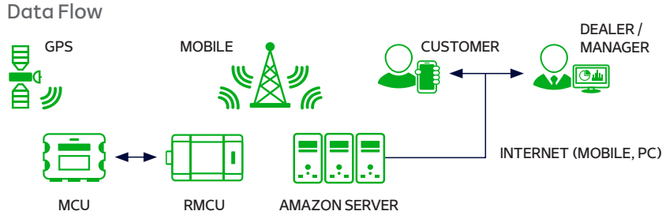

Dimensions

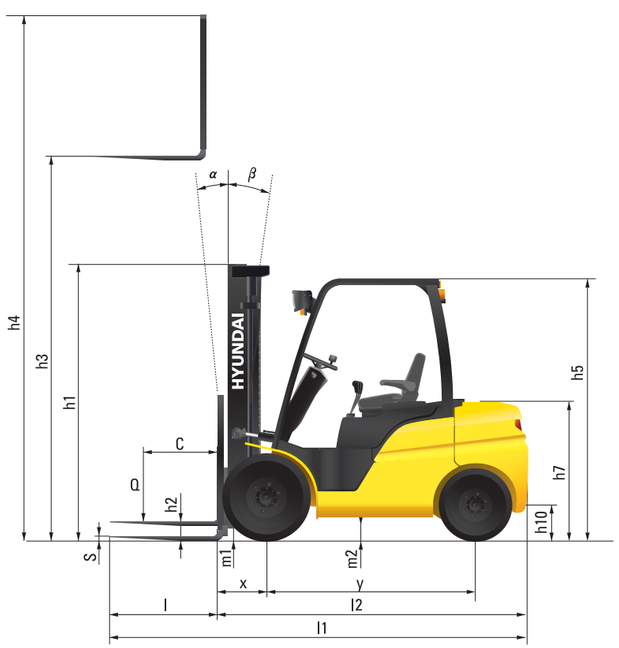

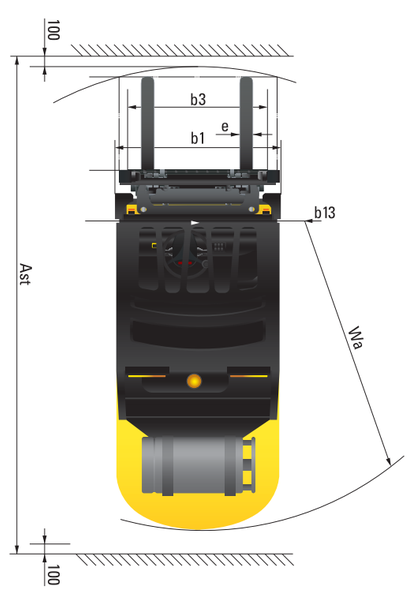

Specification

Identification						
1.1	Manufacturer (Abbreviation)			Hyundai		
1.2	Manufacturer's Type Designation			25D-9V	30D-9V	35DN-9V
1.3	Drive : Electric (Battery Or Mains), Diesel, Petrol, Fuel Gas			DIESEL	DIESEL	DIESEL
1.4	Type Of Operation: Hand, Pedestrian, Standing, Seated, Order-Picker			Seated	Seated	Seated
1.5	Load Capacity / Rated Load	Q	lb	5,000	6,000	7,000
1.6	Load Center Distance	c	in	24	24	24
1.8	Load Distance, Center Of Drive Axle To Fork	x	in	18.4	18.4	18.4
1.9	Wheelbase	y	in	65	66.98	66.98
Weights						
2.1	Service Weight		lb	8,583	9,484	10,267
2.2	Axle Loading, Loaded Front/Rear		lb	12,229/1,867	14,019/2,077	15,655/2,328
2.3	Axle Loading, Unloaded Front/Rear		lb	3,483/5,102	3,640/5,845	3,545/6,722
Wheels, Chassis						
3.1	Tires : Solid Rubber, Superelastic, Pneumatic, Polyurethane			P	P	P
3.2	Tire Size, Front			7.00-12-14PR	28X9-15-16PR	8.15-15-14PR
3.3	Tire Size, Rear			6.50-10-12PR	6.50-10-12PR	6.50-10-12PR
3.5	Wheels, Number Front / Rear (X = Driven Wheels)			2x2	2x2	2x2
3.6	Tread, Front	b10	in	39.3	39.6	39.6
3.7	Tread, Rear	b11	in	38.6	38.6	38.6
Basic Dimensions						
4.1	Tilt Of Mast/Fork Carriage Forward/Backrward		degree	6/10	6/10	6/10
4.2	Height, Mast Lowered	h1	In	85.6	86.2	89
4.3	Free Lift	h2	In	6.1	6.1	6.1
4.4	Lift Height	h3	In	130.1	130.1	130.1
4.5	Height, Mast Extended	h4	In	176.6	176.6	176.6
4.7	Height Of Overhead Guard (Cabin)	h5	In	84.8(85.8)	85.8(86.4)	85.8(86.4)
4.8	Seat Height / Stand Height Rel. To Sip	h7	In	46.5	46.5	46.5
4.12	Coupling Height	h10	In	12.2	11.8	11.6
4.19	Overall Length	l1	in	144.5	149.6	149.6
4.20	Length To Face Of Forks	l2	In	103.1	108.3	108.3
4.21	Overall Width	b1	in	47.2	48.4	48.4
4.22	Fork Dimensions	l x e x s	in	1.8x3.9x41.3	1.8x4.8x41.3	1.8x4.8x41.3
4.23	Fork Carriage Iso 2328, Class / Type A, B			II /A	III /A	III /A
4.24	Fork-Carriage Width	b3	in	43.4	43.4	43.4
4.31	Ground Clearance, Below Mast, Loaded	m1	in	5.1	5.7	5.7
4.32	Ground Clearance, Center Of Wheelbase	m2	In	6.8	6.7	6.7
4.34.1	Aisle Width For Pallets 1000 X 1200 Crossways	Ast	in	158.3	161.2	163.3
4.34.2	Aisle Width For Pallets 800 X 1200 Lengthways	Ast	in	166.1	169.1	171.2
4.35	Turning Radius	Wa	in	92.6	97.7	97.7
4.36	Smallest Pivot Point Distance		in	28.1	28.8	28.8
Performance Data						
5.1	Travel Speed, Loaded / Unloaded		mph	9.8/10.7	10.7/11.4	10.2/11.4
5.2	Lift Speed, Loaded / Unloaded		ft/min	108/114	108/114	89/93
5.3	Lowering Speed, Loaded / Unloaded		ft/min	109/99	109/99	101/95
5.6	Max. Drawbar Pull, Loaded / Unloaded		lb	6,289/5,892	5,630/5,488	5,912/5,487
5.8	Max. Gradeability, Loaded / Unloaded		%	44.2/21.5	33.3/20.1	34.7/20.2
5.10	Service Brake			FOOT / HYDRAULIC	FOOT / HYDRAULIC	FOOT / HYDRAULIC
Combustion-Engine						
7.1	Engine Manufacturer / Type			HDI DM02	HDI DM02	HDI DM02
7.2	Engine Power Acc. To Iso 1585		Hp/rpm	67.7/2,300	67.7/2,300	67.7/2,300
7.3	Maximum Torque		Lbf·ft/rpm	180.7/1,600	180.7/1,600	180.7/1,600
7.4	No. Of Cylinders / Displacement		EA/cc	4/2,392	4/2392	4/2392
Addition Data						
8.1	Type Of Drive Control			HG DM02	HG DM02	HG DM02
8.2	Operating Pressure, System / Attachments		psi	3,000/2,100	3,000/2,100	3,000/2,100
8.3	Oil Volume For Attachments		GPM-US	15	15	15
8.4	Sound Level At The Driver's Ear According To Din 12053		dB (A)	83	83	83
8.5	Trailer Coupling, Type Din			PIN	PIN	PIN

25D-9V

Mast Type		Maximum Fork Height	Overall Height (Lowered)	Free Lift Height		Tilt Angle		Load capacity without Side shift		Load capacity with Intergral Side shift		Truck Weight (Unloaded)	
								Single Tire	Double Tire	Single Tire	Double Tire		
				With Load Backrest	Without Load Backrest	Fwd	Bwd	24in LC	24in LC	24in LC	24in LC	Single Tire	Double Tire
		in	in	in	in	deg	deg	lb	lb	lb	lb	lb	lb
2 Stage Limited Free Lift	V300	118	80	6	6	6	10	5,000	5,000	5,000	5,000	8,541	8,873
	V330	130	86	6	6	6	10	5,000	5,000	5,000	5,000	8,584	8,917
	V350	138	90	6	6	6	10	5,000	5,000	5,000	5,000	8,622	8,954
	V370	146	95	6	6	6	10	5,000	5,000	5,000	5,000	8,670	9,003
	V400	158	101	6	6	6	10	5,000	5,000	4,870	5,000	8,736	9,069
	V450	177	113	6	6	6	6	5,000	5,000	4,690	4,820	8,899	9,231
2 Stage Full Free Lift	VF325	129	86	60	60	6	6	5,000	5,000	5,000	5,000	8,659	9,001
3 Stage Full Free Lift	TF430	169	80	54	50	6	6	5,000	5,000	4,730	4,870	8,877	9,220
	TF450	177	84	58	56	6	6	5,000	5,000	4,670	4,800	8,926	9,268
	TF470	185	86	60	56	6	6	4,930	5,000	4,600	4,730	8,955	9,298
	TF500	197	90	64	60	6	6	3,880	5,000	3,590	4,620	9,004	9,347
	TF550	217	97	72	70	6	6	3,240	4,780	2,990	4,430	9,091	9,433
	TF600	236	105	80	78	6	6	2,930	4,580	2,680	4,230	9,233	9,576
	TF650	256	113	80	75	3	3	2,840	4,540	2,620	4,210	9,336	9,679
	TF700	276	121	88	83	3	3	2,420	4,360	2,220	4,030	9,420	9,763
	TS430	169	80	54	45	6	6	5,000	5,000	4,730	4,870	8,877	9,220
	TS450	177	84	58	53	6	6	5,000	5,000	4,670	4,800	8,926	9,268
	TS470	185	86	60	51	6	6	4,930	5,000	4,600	4,730	8,955	9,298
	TS500	197	90	64	55	6	6	3,880	5,000	3,590	4,620	9,004	9,347
	TS550	217	97	72	67	6	6	3,240	4,780	2,990	4,430	9,091	9,433
	TS600	236	105	80	75	6	6	2,930	4,580	2,680	4,230	9,233	9,576
4 Stage Full Free Lift	QF610	241	85	60	56	3	3	3,320	4,400	3,080	4,070	9,767	10,154
	QF700	276	97	71	67	3	3	2,290	4,120	2,090	3,810	9,966	10,353

30D-9V

Mast Type		Maximum Fork Height	Overall Height (Lowered)	Free Lift Height		Tilt Angle		Load capacity without Side shift		Load capacity with Intergral Side shift		Truck Weight (Unloaded)	
								Single Tire	Double Tire	Single Tire	Double Tire		
				With Load Backrest	Without Load Backrest	Fwd	Bwd	24in LC	24in LC	24in LC	24in LC	Single Tire	Double Tire
		in	in	in	in	deg	deg	lb	lb	lb	lb	lb	lb
2 Stage Limited Free Lift	V300	118	80	6	6	6	10	6,000	6,000	6,000	6,000	9,438	9,705
	V330	130	86	6	6	6	10	6,000	6,000	6,000	6,000	9,483	9,750
	V350	138	90	6	6	6	10	6,000	6,000	6,000	6,000	9,522	9,789
	V370	146	96	6	6	6	10	6,000	6,000	5,930	6,000	9,572	9,839
	V400	158	102	6	6	6	10	6,000	6,000	5,820	5,930	9,640	9,908
	V450	177	114	6	6	6	6	6,000	6,000	5,590	5,730	9,806	10,073
2 Stage Full Free Lift	VF325	129	86	58	58	6	6	6,000	6,000	6,000	6,000	9,612	9,789
3 Stage Full Free Lift	TF430	169	80	52	50	6	6	6,000	6,000	5,590	5,700	9,926	10,189
	TF450	177	84	56	56	6	6	5,950	6,000	5,510	5,620	9,982	10,245
	TF470	185	86	58	56	6	6	5,860	6,000	5,440	5,550	10,013	10,277
	TF500	197	90	62	60	6	6	4,760	5,900	4,380	5,440	10,062	10,326
	TF550	217	98	69	69	6	6	3,650	5,640	3,350	5,200	10,160	10,423
	TF600	236	106	77	77	6	6	3,020	5,440	2,750	5,000	10,314	10,577
	TF650	256	114	81	76	3	3	2,930	5,370	2,660	4,960	10,426	10,689
	TF700	276	122	89	84	3	3	2,530	5,200	2,290	4,780	10,522	10,786
	TS430	169	80	52	49	6	6	6,000	6,000	5,590	5,700	9,926	10,189
	TS450	177	84	56	55	6	6	5,950	6,000	5,510	5,620	9,982	10,245
	TS470	185	86	58	55	6	6	5,860	6,000	5,440	5,550	10,013	10,277
	TS500	197	90	62	59	6	6	4,760	5,900	4,380	5,440	10,062	10,326
	TS550	217	98	69	69	6	6	3,650	5,640	3,350	5,200	10,160	10,423
	TS600	236	106	77	77	6	6	3,020	5,440	2,750	5,000	10,314	10,577
4 Stage Full Free Lift	QF610	241	86	57	57	3	3	3,520	5,290	3,240	4,870	10,726	11,030
	QF700	276	97	69	69	3	3	2,510	4,960	2,270	4,560	10,924	11,230

35DN-9V

Mast Type		Maximum Fork Height	Overall Height (Lowered)	Free Lift Height		Tilt Angle		Load capacity without Side shift		Load capacity with Intergral Side shift		Truck Weight (Unloaded)	
								Single Tire	Double Tire	Single Tire	Double Tire		
				With Load Backrest	Without Load Backrest	Fwd	Bwd	24in LC	24in LC	24in LC	24in LC	Single Tire	Double Tire
		in	in	in	in	deg	deg	lb	lb	lb	lb	lb	lb
2 Stage Limited Free Lift	V300	118	83	6	6	6	10	7,000	7,000	7,000	7,000	10,214	10,404
	V330	130	89	6	6	6	10	7,000	7,000	7,000	7,000	10,266	10,456
	V350	138	93	6	6	6	10	7,000	7,000	6,940	7,000	10,301	10,490
	V370	146	99	6	6	6	10	7,000	7,000	6,830	6,980	10,353	10,543
	V400	158	105	6	6	6	10	7,000	7,000	6,680	6,830	10,424	10,613
	V450	177	117	6	6	6	6	6,900	7,000	6,410	6,560	10,594	10,783
2 Stage Full Free Lift	VF325	129	89	60	60	6	6	7,000	7,000	6,960	7,000	10,475	10,664
3 Stage Full Free Lift	TF430	169	83	52	52	6	6	6,900	7,000	6,410	6,540	10,806	10,996
	TF450	177	87	56	56	6	6	6,790	6,960	6,300	6,450	10,854	11,044
	TF470	185	89	58	58	6	6	6,700	6,870	6,210	6,370	10,884	11,073
	TF500	197	93	62	62	6	6	5,400	6,740	5,000	6,230	10,933	11,123
	TF550	217	101	69	69	6	6	4,850	6,520	4,470	6,040	11,030	11,220
	TF600	236	109	77	77	6	6	3,130	6,300	2,860	5,820	11,190	11,379
	TF650	256	117	85	81	3	3	2,880	6,080	2,620	5,620	11,297	11,487
	TF700	276	124	93	89	3	3	2,600	5,880	2,350	5,420	11,386	11,576
	TS430	169	83	52	52	6	6	6,900	7,000	6,410	6,540	10,806	10,996
	TS450	177	87	56	56	6	6	6,790	6,960	6,300	6,450	10,854	11,044
	TS470	185	89	58	58	6	6	6,700	6,870	6,210	6,370	10,884	11,073
	TS500	197	93	62	62	6	6	5,400	6,740	5,000	6,230	10,933	11,123
	TS550	217	101	69	69	6	6	4,850	6,520	4,470	6,040	11,030	11,220
	TS600	236	109	77	77	6	6	3,130	6,300	2,860	5,820	11,190	11,379
4 Stage Full Free Lift	QF610	241	88	57	57	3	3	4,180	6,080	3,850	5,620	11,468	11,658
	QF700	276	99	69	69	3	3	2,770	5,730	2,530	5,290	11,667	11,856

Load Capacity

25D-9V

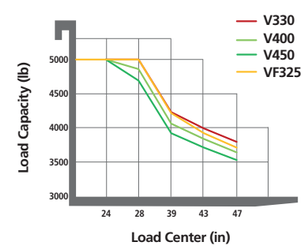

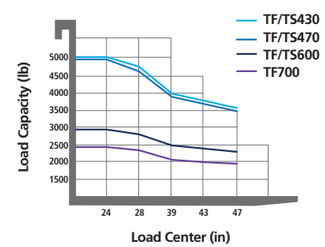

30D-9V

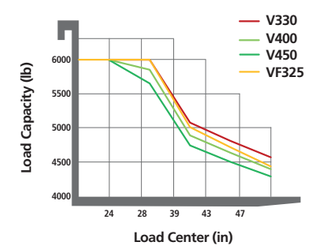

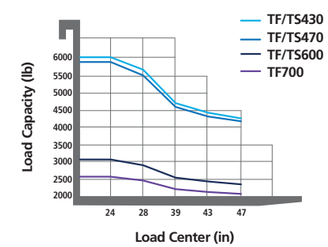

35DN9-V

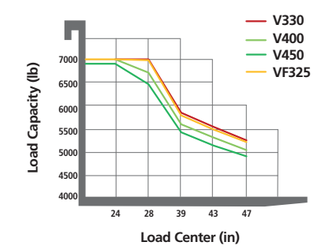

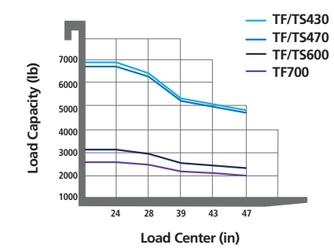

Standard & Option

			Details	25/30/ 35D(n)-9V
OPERATION ROOM	OHG & Cabin		Overheadguard (25D-9V : 2,160mm, Other Models : 2,180mm)	●
			Overheadguard with Rain Cover (25D-9V : 2,170mm, Other Models : 2,190mm)	○
			Cabin Options (One Door, Two Door)	○
			Partial Cabin (Front Glass with Wiper, Rear Glass & Top Rain Cover)	○
	A/C		A/C & Heater, Heater only	○
	Seat		Non-suspension, OPSS, Orange Belt, S/S, PVC	○
			Non-suspension, OPSS, Orange Belt, S/S, B/S, PVC, Interlock Option Available	○
			Grammer, OPSS, Orange Belt, S/S, PVC	○
			Grammer, OPSS, Orange Belt, S/S, B/S, Arm Rest, PVC, Interlock Option Available	○
			Grammer, OPSS, Orange Belt, S/S, Arm Rest, PVC	●
			Grammer, OPSS, Orange Belt, S/S, Arm Rest, PVC, Heat	○
			Grammer, OPSS, Orange Belt, S/S, Arm Rest, PVC, Heat, Back Rest Extension	○
			Grammer, OPSS, Orange Belt, S/S, B/S, PVC, Interlock Option Available	○
			Grammer, OPSS, Orange Belt, S/S, B/S, Arm Rest, Fabric, Interlock Option Available	○
	Lever		1,050mm Fork	●
	Other Options		Rear Horn	●
			Extinguisher	○
MAST	Mast		2 Stage Mast - Standard (V)	●
			2 Stage Mast - Single Full Free (VF), Dual Full Free (VS)	○
			3 Stage Mast - Single Full Free (TF), Dual Full Free (TS)	○
			4 Stage Mast - Single Full Free (QF)	○
	Fork		Length : 1,050mm	●
			Length : 900, 1,000, 1,200, 1,350, 1,500, 1,650, 1,800, 2,100mm	○
	Carriage	Type	Hook	●
			Hook Integral - Sideshift	○
			Integral Special - Sideshift + Fork Positioner	○
		Width	Narrow (1,102mm)	●
			Wide (1,442mm)	○
	Attachment		Fork Positioner - Synchronized or Independent	○
			Side Shift	○
			Quick Disconnector	○

		Details	25/30/ 35D(n)-9V
HYDARULIC	MCV & Piping	3 Spool MCV	●
		4 Spool MCV	○
		Attached Piping for All MCVs & Masts	○
	Brake	Brake - Genaral type	●
		Brake - Booster type	○
TIRE	Tires	Pneumatic Tire (Single)	●
		Solid Tire	○
		Non-Marking Tire	○
		Front Pneumatic + Rear Solid	○
		Front Solid + Rear Pneumatic	○
		Pneumatic Double or Solid Double (15" Wheel Rim)	○
VISIBILITY	LED Work Lamp	Front only	●
		Front & Rear	○
	Safety Lamp	Rear Blue Spot	○
		LED Beacon Lamp	○
	Mirror	Panorama Mirror	●
		Panorama Mirror & Back Mirror LH	○
		Panorama Mirror & Back Mirror LH/RH	○
	Camera	Rear camera	○
CONVENIENCE	—	Knob-Switch with Direction & Horn	○
		Master Switch to Cut off Electricity from Battery	●
		Master Switch to Cut off Electricity from Battery	●
		Hydralic Pressure Display	●
OTHERS	—	Rear Tire Cover + Under Cover	○
		Fuel Cap with Key	○
		Rear Horn	○
		Pre-Cleaner	○
		Hi-Mate Basic	○
		Hi-Mate Premium	○
		Hyd. Oil Std. VG 46	●
		Hyd. Oil Opt. VG 68 (Tropical) / 15 (Cold) / 32 (Cold)	○
		Accumulator	○
		Clamp Interlock (3SP or 4SP)	○

ELEVEX™ Material Handling Solutions

MONTREAL (Head office)
19151 A, Cruickshank Avenue
Baie-D'Urfé (Québec) H9X 3N9

Phone: 418 694-4223
Toll free: 1 866 421-4223
info@elevex.ca

SAGUENAY
2305, Alexis-Le-Trotteur
St. Jonquière (Québec) G7X 9H8

elevex.ca

NO ONE
DELIVERS MORE

HD HYUNDAI XITESOLUTION | MATERIAL HANDLING