25/30L-9A, 35LN-9A

5,000 / 6,000 / 7,000 lbs capacities

LP · Pneumatic Tire

HYUNDAI
MATERIAL HANDLING
NO ONE DELIVERS MORE

ELEVEX™
Material Handling Solutions

MORE PROVEN QUALITY
MORE ADVANCED TECHNOLOGY.
ALL TO GET MORE OUT OF YOUR OPERATORS AND YOUR OPERATION.

Get more of what you're looking for:
THE 9 SERIES FROM HYUNDAI

The 9-Series of LPG forklifts from Hyundai sets a new standard in performance, operator comfort, productivity, and ease of maintenance. It all begins with an advanced EPA/CARB Tier-IV certified powerplant. Beyond that, you'll find features like wet disc brakes, fully hydrostatic steering, and a rugged drive axle that will allow you to move more loads, more efficiently, and more reliably for years in even the toughest of applications.

But there is so much more to the 9-Series: advanced electronics, simplified servicing, and an operator's compartment that increases visibility as it reduces fatigue. And it all comes with proven Hyundai quality and value.

POWERFUL, EFFICIENT HYUNDAI-BUILT ENGINE

Offering Best-In-Class HP and torque at lower RPMs, our proven HMC L4KB 2.4L powerplant delivers high performance and more:

- Outstanding fuel efficiency
- Low vibration and noise
- Low emissions
- Easy service access

ADVANCED, INFORMATION RICH LCD CLUSTER

The new cluster brings operators greater control and ready access to key information and operating functions:

- Hi-viz multicolor display
- Adjustable performance parameters
- Maintenance menu and tracking
- Tilt, inclination, and load weight indicators

SPACIOUS OPERATOR COMPARTMENT

The roomy, comfortable operator's compartment offers wide visibility and is designed for all-day operator comfort. It includes a standard Grammer™ suspension seat with optional heating and headrest. It also features optimized pedal position for reduced fatigue, a fully adjustable steering wheel, and optional fingertip controls.

EASY SERVICE ACCESS

The easy-lifting cover on the 9-Series reveals a large workspace for ready access to the powertrain and functional parts to simplify and speed servicing. Downtime is further reduced thanks to a large air cleaner with extended service intervals and a protected waterproof and dustproof fuse and relay box.

HILL ASSIST CONTROL SYSTEM

The hill assist control prevents unintended movement while operating on a grade, both incline and decline. Other safety features include an auto parking brake, operator presence sensing system requiring the operator to be in the seat to use travel and hydraulic functions, and forks with a controlled descent speed.

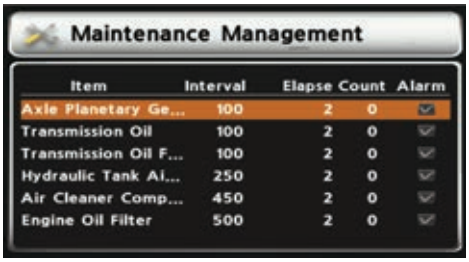

Item	Interval	Elapse	Count	Alarm
Axle Planetary Ge...	100	2	0	✓
Transmission Oil	100	2	0	✓
Transmission Oil F...	100	2	0	✓
Hydraulic Tank Ai...	250	2	0	✓
Air Cleaner Comp...	450	2	0	✓
Engine Oil Filter	500	2	0	✓

MAINTENANCE MANAGEMENT

Displayed on the cluster, this indicator alerts operators and technicians when maintenance items need to be replaced before a possible failure, safeguarding your forklift, extending its service life, and reducing downtime.

The 9-Series brings you even more advantages.

- Our high-output engine delivers greater acceleration, better gradeability and fast travel speeds up to 12 mph
- Clutch protection system reduces inching impact
- Low entrance height makes entering and exiting the vehicle safer and easier
- Strong overhead guard exceeds CEE and ANSI regulations
- Outstanding lighting package includes bright, protected headlights and rear safety lamps for exceptional visibility
- Load weight indicator displays load weight and provides visual and audible warnings if the maximum capacity is exceeded
- Auto fork leveling system helps protect loads and improves productivity
- Optional rear-view camera and monitor helps ensure a safer working environment
- Password starting system prevents unauthorized use
- Optional rear tire and undercarriage covers protects the engine, radiator and other key components from dusts and other contaminants

ONLY HYUNDAI OFFERS YOU SUCH A COMPREHENSIVE, FULLY INTEGRATED TELEMATICS SYSTEM.

HI-MATE MANAGEMENT SYSTEM

Hi-Mate is one of the industry's most advanced remote management system. With continuous data collection, Hi-Mate delivers more communication, control, and ability to track, monitor, maintain, and manage your forklift fleet. It is the proven way to efficiently coordinate both your equipment and human resources.

Hi-Mate works by collecting key data from sensors mounted to your equipment that track operation of the forklift, relaying that information to your computer or mobile device in real time. By monitoring key components, such as the engine, electric system, and hydraulics, Hi-Mate can help you evaluate machine and operator performance, create preventive maintenance programs, and help you minimize downtime as you maximize productivity.

Equipment operation management

Real-time monitoring and follow-up management of individual pieces of equipment or equipment fleet deliver essential operational status and information, including:

- Key-on time, travel hours, work hours, and GPS location

Equipment status management

Vital diagnostic and maintenance data is relayed as alerts, while Hi-Mate Premium provides tracking of pre-shift checklists to help reduce downtime and ensure OSHA compliance:

- Alerts are sent for DTCs, system warning, and required maintenance

Safe traveling control

An impact monitor provides alerts, accountability, and follow-up management of safety incidents involving equipment during operation:

- The system logs the number and severity of impacts as well as the operator who was logged into the unit at the time of the incident

Human resource management

Hi-Mate Premium can control who operates equipment via a pin pad and RFID reader:

- Provided information can be used to evaluate productivity, efficiency, and workforce safety
- Tracking the weight load indicator captures operator productivity

Data Flow

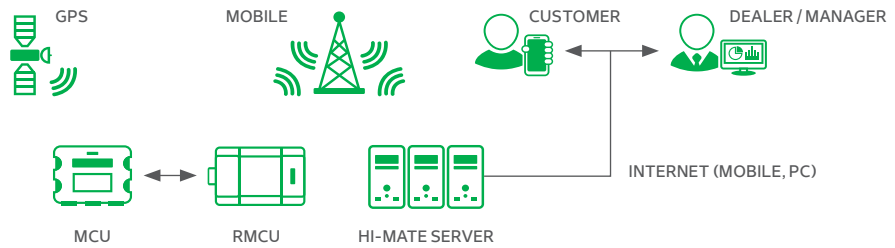

Dimensions

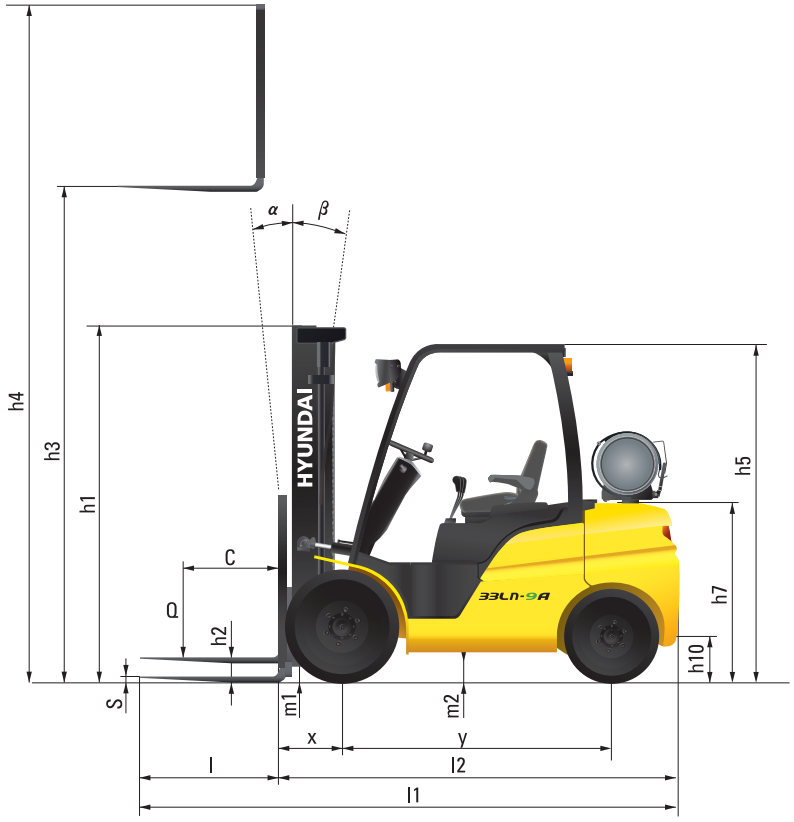

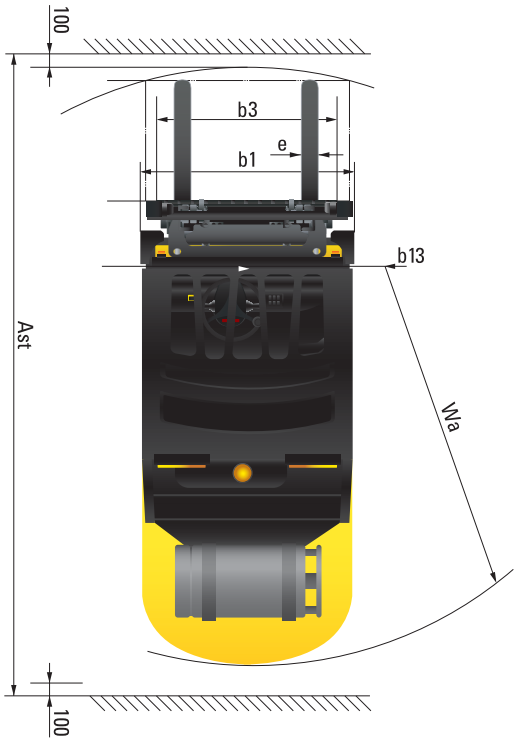

Specifications

Identification						
1.1	Manufacturer			Hyundai		
1.2	Manufacturer's Model Designation			25L-9A	30L-9A	35LN-9A
1.3	Drive: Electric (Battery or Mains), Diesel, Petrol, Fuel Gas, Manual			LPG	LPG	LPG
1.4	Type of Operation: Hand, Pedestrian, Standing, Seated, Order-Picker			Seated	Seated	Seated
1.5	Load Capacity / Rated Load	Q	lb	5,000	6,000	7,000
1.6	Load Center Distance	C	in	24	24	24
1.8	Load Distance, Center of Drive Axle To Fork	X	in	18.4	18.4	18.4
1.9	Wheelbase	y	in	65	67	67
Weights						
2.1	Service Weight		lb	8,203.4	9,074.2	9,998
2.2	Axle Loading, Loaded Front / Rear		lb	12,105.6 / 1,611.6	13,884.7 / 1,803.4	15,304.5 / 2,407.4
2.3	Axle Loading, Unloaded Front / Rear		lb	3,306 / 4,844	3,505.3 / 5,568.9	3,194.5 / 6,801.3
Wheels, Chassis						
3.1	Tires ; Pneumatic(P), Solid(S), Non-marking(N)			P	P	P
3.2	Tires Size, Front		Single	7 x 12 x14PR	28X9 x 15 x 14PR	28X9 x 15 x 14P
			Double	6 x 15 x 10PR	6 x 10 x 10PR	6 x 10 x 10PR
3.3	Tires Size, Rear		Single	6.5 x 10 x 14PR	6.5 x 10 x 14PR	6.5 x 10 x 14PR
			Double	6.5 x 10 x 12PR	6.5 x 10 x 12PR	6.5 x 10 x 12PR
3.4	Number of Wheels Front / Rear (x=driven wheels)			2x / 2	2x / 2	2x / 2
3.5	Tires Width, Front		Single in	39	40	40
			Double in	45	45	45
	Tires Width, Rear		in	39	39	39
Basic Dimensions						
4.1	Mast / Fork Carriage Tilt Forward / Backward (/)		degrees	6 / 10	6 / 10	6 / 10
4.2	Lowered Mast Height	H1	in	85.6	86.2	89
4.3	Free Lift	H2	in	6	6	6
4.4	Lift Height	H3	in	130	130	130
4.5	Extended Mast Height	H4	in	177	177	177
4.7	Overhead Guard Height (Cabin)	H5	in	85 (85)	86 (86)	86 (86)
4.8	Seat Height / Standing Height Rel. to SIP	H7	in	47	48	48
4.12	Coupling Height	H10	in	12	12	12
4.19	Overall Length	l1	in	144	147	149
4.20	Length to Face of Forks	l2	in	103	105	109
4.21	Overall Width	B1	Single in	47	48.4	48.4
		b1	Double in	60	60	60
4.22	Fork Dimensions(Hook Type)	l / e / s	in	41 x 4 x 2	41 x 4.8 x 2	41.3 x 4.8 x 2
4.23	Fork Carriage Iso 2328, Class / Type A,B	b3	in	2A	3A	3A
4.24	Fork-Carriage Width	m1	in	43.4	43.3	43.3
4.31	Ground Clearance, Loaded, Under Mast	m2	in	5	6	6
4.32	Ground Clearance, Centre Of Wheelbase	Ast	in	6.7	7	7
4.33	Aisle Width for Pallets, 39.3 x 47.3 Crossways (L x W)	Ast	in	158	161	164
4.34	Aisle Width for Pallets, 31.5 x 47.3 Lengthways (W x L)	Wa	in	168	169	172
4.35	Turning Radius	b13	in	92	95	98
4.36	Smallest Pivot Point Distance	b13	in	28	29	29
Performance Data						
5.1	Travel Speed, Unloaded		mph	11	12	12
5.2	Lift Speed, Loaded / Unloaded		fpm	114 / 116	112 / 116	88.5 / 94.5
5.3	Lowering Speed, Loaded / Unloaded		fpm	98.5 / 90.5	98.5 / 90.5	98.5 / 90.5
5.5	Drawbar Pull, Loaded		lbs	5,922	5,373	4,782
5.7	Gradient Performance, Loaded		%	35	28	25
5.9	Acceleration Time, Loaded / Unloaded (32.8 Ft)		sec	-	-	-
5.10	Service Brake			Hydraulic Assisted Wet Disc	Hydraulic Assisted Wet Disc	Hydraulic Assisted Wet Disc
Engine						
6.1	Engine Manufacturer / Type			HMC/L4KB	HMC/L4KB	HMC/L4KB
6.2	Engine Power Acc. to ISO 1585		hp / rpm	59.5 / 2,300	59.5 / 2,300	59.5 / 2,300
6.3	Maximum Torque		lbf / rpm	137 / 1,800	137 / 1,800	137 / 1,800
6.4	No. of Cylinder / Cubic Capacity		EA / cc	4 / 2,359	4 / 2,359	4 / 2,359
6.5	Fuel Consumption Acc. to VDI Cycle		gal / hr	1.1	1.2	1.3
Other Details						
8.1	Type of Drive Control			PowerShift	PowerShift	PowerShift
8.2	Operating Pressure, System / Attachments		psi	2,843 / 2,350	2,988 / 2,350	3,133 / 2,350
8.3	Oil Volume (hydraulic)		gpm	8 (16 Max.)	8 (16 Max.)	8 (16 Max.)
8.4	Sound Pressure Level at Driver's Ear According to DIN 12053		dB (A)	80	80	80
8.5	Trailer Coupling, Type DIN			Pin	Pin	Pin

25L-9A

Mast Type		Maximum Fork Height	Overall Height (Lowered)	Free Lift Height		Tilt Angle		Load Capacity w/o side shift		Load Capacity w/ side shift		TRUCK WEIGHT (UNLOADED)	
								Single Tire	Double Tire	Single Tire	Double Tire		
				w/ Load Backrest	w/o Load Backrest	Fwd	Bwd	24 in LC	24 in LC	24 in LC	24 in LC	Single Tire	Double Tire
		in	in	in	in	deg	deg	lb	lb	lb	lb	lb	lb
2-STAGE LIMITED FREE LIFT	V300	118.3	79.7	4.5	4.5	6	10	5,000	5,000	5,000	5,000	8,161	8,488
	*V330	130.1	85.6	4.5	4.5	6	10	5,000	5,000	5,000	5,000	8,203	8,532
	V350	138.0	89.6	4.5	4.5	6	10	5,000	5,000	5,000	5,000	8,241	8,569
	V370	145.9	95.5	4.5	4.5	6	10	5,000	5,000	5,000	5,000	8,267	8,598
	V400	157.7	101.4	4.5	4.5	6	10	5,000	5,000	5,000	5,000	8,355	8,684
	V430	169.5	107.3	4.5	4.5	6	6	5,000	5,000	5,000	5,000	8,470	8,799
	V450	177.4	113.2	4.5	4.5	6	6	5,000	5,000	4,870	5,000	8,519	8,847
	V470	185.2	117.1	4.5	4.5	6	6	4,960	5,000	4,740	5,000	8,552	8,878
	V500	197.0	123.0	4.5	4.5	6	6	4,850	5,000	4,630	5,000	8,600	8,926
2-STAGE FULL FREE LIFT	VF295 / VS295	117.2	79.7	33.3	54.2	6	6	5,000	5,000	5,000	5,000	8,205	8,543
	VF325 / VS325	129.0	85.1	38.7	60.2	6	6	5,000	5,000	5,000	5,000	8,278	8,618
	VF345 / VS345	136.9	89.6	43.1	64.1	6	6	5,000	5,000	5,000	5,000	8,331	8,688
3-STAGE FULL FREE LIFT	TF370/TS370	145.9	71.9	25.4	46.3	6	6	5,000	5,000	5,000	5,000	8,404	8,743
	TF400/TS400	157.7	75.8	29.3	50.3	6	6	5,000	5,000	5,000	5000	8,457	8,796
	TF430/TS430	169.5	79.7	33.3	54.2	6	6	5,000	5,000	5,000	5,000	8,496	8,836
	TF450/TS450	177.4	83.7	37.2	58.1	6	6	5,000	5,000	4,850	5,000	8,545	8,884
	TF470/TS470	185.2	85.6	39.2	60.1	6	6	4,920	5,000	4,700	4,860	8,576	8,913
	TF500/TS500	197.0	89.6	43.1	64.1	6	6	4,810	4,940	4,590	4,720	8,624	8,962
	TF550/TS550	216.7	97.4	51.0	71.9	6	6	3,240	4,780	3,020	4,560	8,710	9,048
	TF600/TS600	236.4	105.3	58.9	79.8	6	6	2,930	4,590	2,710	4,370	8,854	9,191
	TF650/TS650	256.1	113.2	66.7	87.7	3	3	2,840	4,540	2,620	4,320	8,955	9,295
	TF700/TS700	275.8	121.1	74.6	95.6	3	3	2,430	4,370	2,210	4,150	9,039	9,378
4-STAGE FULL FREELIFT	QF610	240.7	85.0	38.6	59.5	3	3	3,200	3,400	2,960	3,160	9,387	9,771
	QF660	260.4	92.9	46.5	67.4	3	3	2,800	3,200	2,560	2,960	9,519	9,901
	QF700	276.2	96.9	50.4	71.3	3	3	2,200	3,000	1,960	2,760	9,586	9,969
	QF745	293.9	102.8	56.3	77.2	3	3	1,600	2,800	1,360	2,560	9,687	10,071
	QF790	311.6	108.7	62.2	83.1	3	3	1,200	2,400	960	2,160	9,907	10,291

30L-9A

Mast Type		Maximum Fork Height	Overall Height (Lowered)	Free Lift Height		Tilt Angle		Load Capacity w/o side shift		Load Capacity w/ side shift		TRUCK WEIGHT (UNLOADED)	
								Single Tire	Double Tire	Single Tire	Double Tire		
				w/ Load Backrest	w/o Load Backrest	Fwd	Bwd	24 in LC	24 in LC	24 in LC	24 in LC	Single Tire	Double Tire
		in	in	in	in	deg	deg	lb	lb	lb	lb	lb	lb
2-STAGE LIMITED FREE LIFT	V300	118.3	80.3	4.5	4.5	6	10	6,000	6,000	6,000	6,000	9,030	9,303
	*V330	130.1	86.2	4.5	4.5	6	10	6,000	6,000	6,000	6,000	9,074	9,347
	V350	138.0	90.2	4.5	4.5	6	10	6,000	6,000	6,000	6,000	9,114	9,387
	V370	145.9	96.1	4.5	4.5	6	10	6,000	6,000	6,000	6,000	9,142	9,416
	V400	157.7	102.0	4.5	4.5	6	6	6,000	6,000	6,000	6,000	9,231	9,506
	V430	169.5	107.9	4.5	4.5	6	6	6,000	6,000	6,000	6,000	9,347	9,621
	V450	177.4	113.8	4.5	4.5	6	6	6,000	6,000	5,800	6,000	9,398	9,672
	V470	185.2	117.7	4.5	4.5	6	6	5,910	6,000	5,610	5,830	9,431	9,705
	V500	197.0	123.6	4.5	4.5	6	6	5,820	5,970	5,520	5,670	9,482	9,755
2-STAGE FULL FREE LIFT	VF295 / VS295	117.2	80.3	33.9	51.7	6	6	6,000	6,000	6,000	6,000	9,173	9,444
	VF325 / VS325	129.0	85.1	38.7	60.2	6	6	6,000	6,000	6,000	6,000	9,250	9,522
	VF345 / VS345	136.9	90.2	43.7	61.6	6	6	6,000	6,000	6,000	6,000	9,328	9,599
3-STAGE FULL FREE LIFT	TF370/TS370	145.9	72.4	26.0	43.9	6	6	6,000	6,000	6,000	6,000	9,414	9,685
	TF400/TS400	157.7	76.4	29.9	47.8	6	6	6,000	6,000	6,000	6,000	9,469	9,738
	TF430/TS430	169.5	80.3	33.9	51.7	6	6	6,000	6,000	5,810	6,000	9,517	9,786
	TF450/TS450	177.4	84.3	37.8	55.7	6	6	5,930	6,000	5,630	5,830	9,572	9,843
	TF470/TS470	185.2	86.2	39.8	57.6	6	6	5,890	5,970	5,590	5,670	9,603	9,874
	TF500/TS500	197.0	90.2	43.7	61.6	6	6	5,730	5,840	5,430	5,540	9,654	9,923
	TF550/TS550	216.7	98.0	51.6	69.4	6	6	3,660	5,640	3,360	5,340	9,751	10,020
	TF600/TS600	236.4	105.9	59.4	77.3	6	3	3,020	5,450	2,720	5,150	9,905	10,174
	TF650/TS650	256.1	113.8	67.3	85.2	3	3	2,930	5,380	2,630	5,080	10,018	10,287
	TF700/TS700	275.8	121.7	75.2	93.1	3	3	2,540	5,200	2,240	4,900	10,112	10,384
4-STAGE FULL FREE LIFT	QF610	240.7	85.6	39.2	57.0	3	3	3,400	3,600	3,040	3,240	10,317	10,628
	QF660	260.4	93.5	47.0	64.9	3	3	3,000	3,400	2,640	3,040	10,450	10761
	QF700	276.2	97.4	51.0	68.9	3	3	2,400	3,200	2,040	2,840	10,516	10,827
	QF745	293.9	103.3	56.9	74.8	3	3	1,800	3,000	1,440	2,640	10,617	10,928
	QF790	311.6	109.3	62.8	80.7	3	3	1,400	2,600	1,040	2,240	10,838	11,151

35LN-9A

Mast Type		Maximum Fork Height	Overall Height (Lowered)	Free Lift Height		Tilt Angle		Load Capacity w/o side shift		Load Capacity w/ side shift		TRUCK WEIGHT (UNLOADED)	
								Single Tire	Double Tire	Single Tire	Double Tire		
				w/ Load Backrest	w/o Load Backrest	Fwd	Bwd	24 in LC	24 in LC	24 in LC	24 in LC	Single Tire	Double Tire
		in	in	in	in	deg	deg	lb	lb	lb	lb	lb	lb
2-STAGE LIMITED FREE LIFT	V300	118.3	83.1	4.5	4.5	6	10	7.000	7.000	7.000	7.000	9,946	10,129
	*V330	130.1	89.0	4.5	4.5	6	10	7.000	7.000	7.000	7.000	9,998	10,181
	V350	138.0	92.9	4.5	4.5	6	10	7.000	7.000	7.000	7.000	10,033	10,216
	V370	145.9	98.8	4.5	4.5	6	10	7.000	7.000	6.890	7.000	10,085	10,268
	V400	157.7	104.7	4.5	4.5	6	10	7.000	7.000	6.730	6.860	10,156	10,339
	V430	169.5	110.6	4.5	4.5	6	6	6.950	7.000	6.580	6,710	10,274	10,457
	V450	177.4	116.5	4.5	4.5	6	6	6.850	7.000	6.470	6,620	10,326	10,509
	V470	185.2	120.5	4.5	4.5	6	6	6.750	6.930	6.380	6,530	10,361	10,544
	V500	197.0	126.4	4.5	4.5	6	6	6.600	6.800	6.250	6,380	10,413	10,596
2-STAGE FULL FREE LIFT	VF295 / VS295	117.2	83.1	36.6	54.5	6	6	7.000	7.000	7.000	7,000	10,129	10,306
	VF325 / VS325	129.0	89.0	41.9	60.1	6	6	7.000	7.000	7.000	7,000	10,207	10,383
	VF345 / VS345	136.9	92.9	46.5	64.3	6	6	7.000	7.000	6.900	7,000	10,284	10,459
3-STAGE FULL FREE LIFT	TF370/TS370	145.9	75.2	28.7	43.9	6	6	7.000	7.000	6.750	6,860	10,443	10,620
	TF400/TS400	157.7	79.1	32.7	47.8	6	6	6.950	7.000	6.600	6,730	10,492	10,668
	TF430/TS430	169.5	83.1	36.6	51.7	6	6	6.820	7.000	6.460	6,600	10,538	10,714
	TF450/TS450	177.4	87.0	40.6	55.7	6	6	6.710	6.890	6.380	6,510	10,586	10,762
	TF470/TS470	185.2	89.0	42.5	57.6	6	6	6.620	6.800	6.290	6,420	10,615	10,792
	TF500/TS500	197.0	92.9	46.5	61.6	6	6	6.490	6.670	6.160	6,290	10,665	10,842
	TF550/TS550	216.7	100.8	54.3	69.4	6	6	4.820	6.450	4.490	6,070	10,762	10,938
	TF600/TS600	236.4	108.7	62.2	77.3	6	6	3.100	6.230	2.810	5,870	10,921	11,098
	TF650/TS650	256.1	116.5	70.1	85.2	3	3	2.860	6.000	2.570	5,670	11,029	11,205
	TF700/TS700	275.8	124.4	78.0	93.1	3	3	2.570	5.800	2.280	5,500	11,118	11,294
4-STAGE FULL FREE LIFT	QF610	240.7	87.6	41.1	57.0	3	3	3.800	4.000	3.440	3,560	11,200	11,388
	QF660	260.4	95.5	49.0	64.9	3	3	3.400	3.800	3.040	3,360	11,333	11,521
	QF700	276.2	99.4	53.0	68.9	3	3	2.800	3.600	2.440	3,160	11,398	11,586
	QF745	293.9	105.3	58.9	74.8	3	3	2.200	3.400	1.840	2,960	11,492	11,680
	QF790	311.6	111.2	64.8	80.7	3	3	1.800	3.000	1.440	2,560	11,721	11,909

Load Capacity

25L-9A	30L-9A	35LN-9A

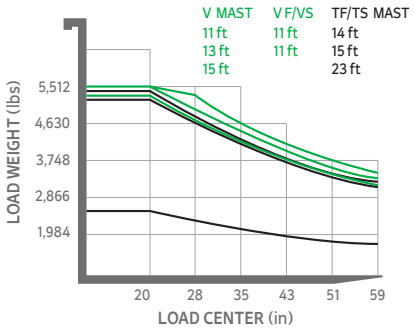

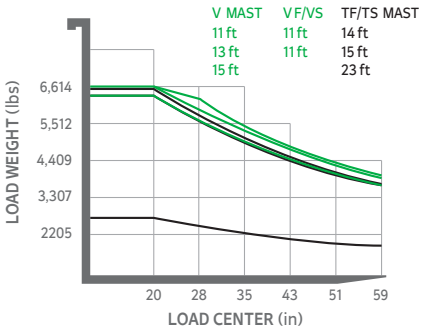

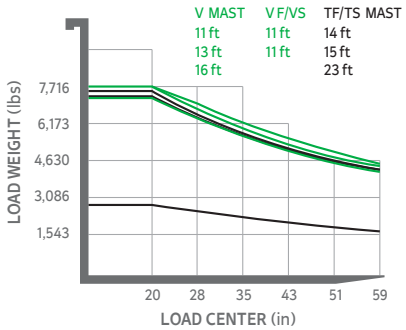

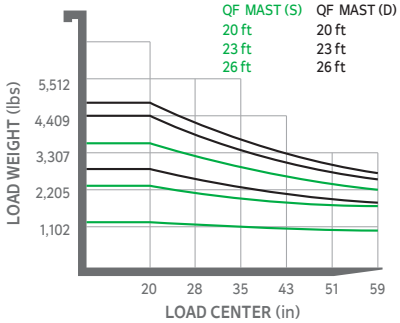

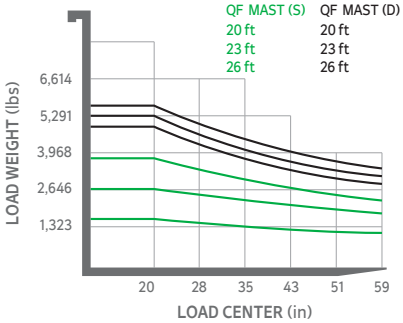

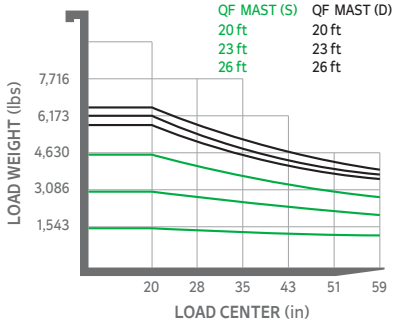

Optional Items

- **Fork (in)**
  25L-9A : 35.5, 39.3, 41.3 (standard), 47.2, 53.1, 59, 65, 71, 82.6
  30/33L-9A, 35LN-9A : 35.5, 41.3 (standard), 45.2, 47.2, 65, 71, 77.5, 83.4, 90.5, 94.4
- **Integral Sideshift, Fork Positioner, Sideshift, Integral Fork Positioner with sideshift**
- **Tire:** Solid (superelastic)/Non-marking/Front double tire
- **M.C.V.:** 4-Spool
- **Seat:** Heat, Backrest Extension, Buckle SW
- **Auto Fork Leveling System**
- **Rear View Camera**
- **Cabin Heater, A/C**
- **Hydraulic Pump Temperature/Pressure Indication**
- **Beacon Lamp (LED) (Amber, Red, Blue)**
- **Rear Work Lamp**
- **F-N-R & Horn Knob Switch**
- **Fingertip Control Lever**

ELEVEX™
Material Handling Solutions

MONTREAL (Head office)
19151 A, Cruickshank Avenue
Baie-D'Urfé (Québec) H9X 3N9

Phone: 418 694-4223
Toll free: 1 866 421-4223
info@elevex.ca

SAGUENAY
2305, Alexis-Le-Trotteur
St. Jonquière (Québec) G7X 9H8

elevex.ca

NO ONE
DELIVERS MORE

HD HYUNDAI XITESOLUTION | MATERIAL HANDLING