25/30/33LC-9

5,000 / 6,000 / 6,500 lbs capacities

LP · Cushion Tire

HYUNDAI
MATERIAL HANDLING
NO ONE DELIVERS MORE

ELEVEX™
Material Handling Solutions

MORE POWER.
MORE ADVANCED FEATURES.
MORE OF WHAT YOU WANT IN A FORKLIFT.

Get more of what you're looking for:
THE LC-9 FROM HYUNDAI

Consider all the things you want in a forklift: Performance. Reliability. Easier Servicing. Advanced features that simplify operation. Ergonomics that drive productivity. Safety features that safeguard not just operators but your entire operation.

You'll find all of these qualities in the new LC-9 Series. We took our proven design to the next level, adding exciting improvements and exclusive features. All to give you more for your money.

POWERFUL, EFFICIENT ALL HYUNDAI POWERTRAIN

Our proven HMC L4KB engine & fuel system deliver maximum power with superior fuel efficiency and more:

- Low noise
- Low vibration
- Outstanding torque
- Low idle for operator comfort
- Compact engine size for easy service accessibility

ADVANCED, INFORMATION RICH LCD CLUSTER

The new cluster brings operators greater control and ready access to key information and operating functions:

- Hi-viz multicolor display
- Adjustable performance parameters
- Maintenance menu and tracking
- Tilt, inclination, and load weight indicators

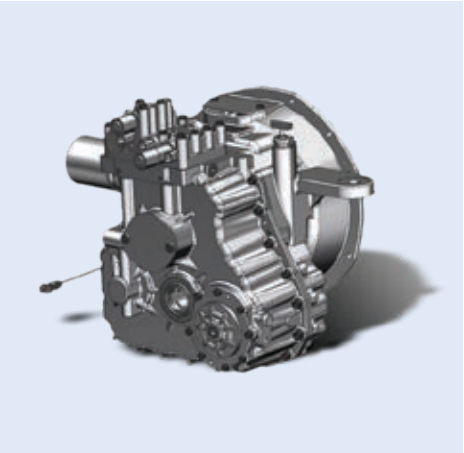

HDX TRANSMISSION

Built by Hyundai to perfectly match with our engine, this smooth operating transmission features an advanced Direction Change Shock Relief (DCSR) system and auto-parking brake for maximum control and safety. The combination of the DCSR, large clutch pack capacity, and increased oil volume extends the longevity of the transmission.

RUGGED HYUNDAI DRIVE AXLE

This durable system reduces noise thanks to an innovative ring gear incorporated in the planetary gear hub reduction system. Durability is further increased using high tensile steel in the differential gear assembly. The wet disc brakes also offer smoother response with reduced maintenance.

MANEUVERABLE YET STABLE

By changing the position of the mast trunnion and lift cylinder, Hyundai engineers shortened the front overhang by 1.3 inches. That small change reduced the LC-9 turning radius by approximately 4.3 inches while increasing stability, giving you greater maneuverability in even tight spaces.

NEW LOAD WEIGHT INDICATOR

This important feature displays load weight and prompts both visual and audible warnings on and from the cluster if maximum capacity is exceeded helping to safeguard the operator, the load itself, and the environment around them.

The LC-9 Series brings you even more advantages.

- Increased entrance width and lower first step for easier and safer access
- Direction Change Shock Relief (DCSR) setting to protect transmission during direction changes
- Low maintenance, high performance wet disc brakes
- High-efficiency/high-capacity air cleaner system
- Reduced steering wheel size for reduced operator fatigue
- Electric parking brake system with convenient switch
- Hill Start Assist (HSA) prevents roll back when stopped on an incline.
- Continental tires for a smoother, more comfortable ride
- New steer rim design for simplified changes and reduced downtime
- Optional travel speed control for increased safety in the workplace
- Optional lever mounted directional and horn control switch
- Optional low fuel warning light
- Optional radiator screen for dusty work environments
- Optional high speed fan for increased cooling capacity
- Hanging-type pedals for reduced operator fatigue
- Password startup restriction prevents unauthorized use
- Fuse and relay box with IP64 waterproof and dustproof rating

ONLY HYUNDAI OFFERS YOU SUCH A COMPREHENSIVE, FULLY INTEGRATED TELEMATICS SYSTEM.

HI-MATE MANAGEMENT SYSTEM

Hi-Mate is one of the industry's most advanced remote management system. With continuous data collection, Hi-Mate delivers more communication, control, and ability to track, monitor, maintain, and manage your forklift fleet. It is the proven way to efficiently coordinate both your equipment and human resources.

Hi-Mate works by collecting key data from sensors mounted to your equipment that track operation of the forklift, relaying that information to your computer or mobile device in real time. By monitoring key components, such as the engine, electric system, and hydraulics, Hi-Mate can help you evaluate machine and operator performance, create preventive maintenance programs, and help you minimize downtime as you maximize productivity.

Equipment operation management

Real-time monitoring and follow-up management of individual pieces of equipment or equipment fleet deliver essential operational status and information, including:

- Key-on time, travel hours, work hours, and GPS location

Equipment status management

Vital diagnostic and maintenance data is relayed as alerts, while Hi-Mate Premium provides tracking of pre-shift checklists to help reduce downtime and ensure OSHA compliance:

- Alerts are sent for DTCs, system warning, and required maintenance

Safe traveling control

An impact monitor provides alerts, accountability, and follow-up management of safety incidents involving equipment during operation:

- The system logs the number and severity of impacts as well as the operator who was logged into the unit at the time of the incident

Human resource management

Hi-Mate Premium can control who operates equipment via a pin pad and RFID reader:

- Provided information can be used to evaluate productivity, efficiency, and workforce safety
- Tracking the weight load indicator captures operator productivity

Data Flow

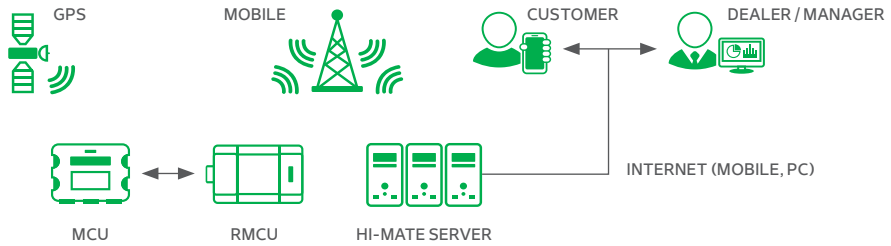

Dimensions

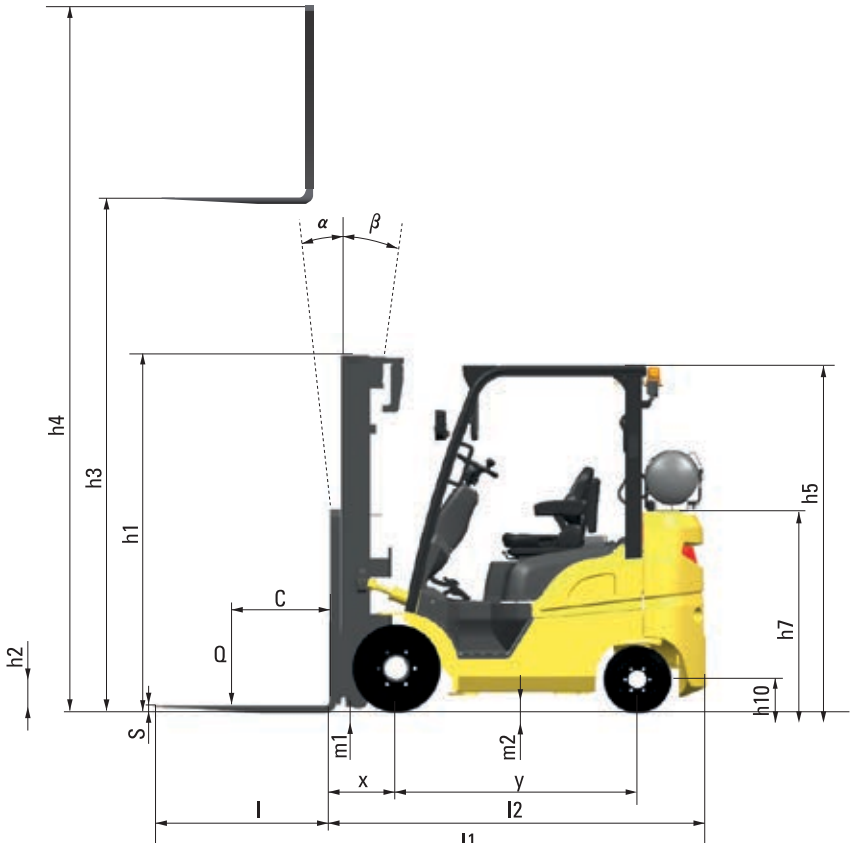

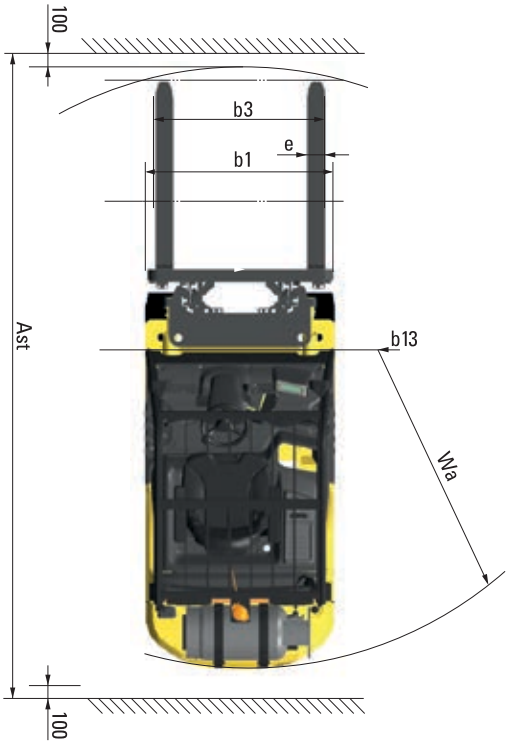

Specifications

Identification						
1.1	Manufacturer			Hyundai		
1.2	Manufacturer's Type Designation			25LC-9	30LC-9	33LC-9
1.3	Drive: Electric (Battery or Mains), Diesel, Petrol, Fuel Gas, Manual			LP	LP	LP
1.4	Type Of Operation : Hand, Pedestrian, Standing, Seated, Order-Picker			Seated	Seated	Seated
1.5	Load Capacity / Rated Load	Q	lb	5,000	6,000	6,500
1.6	Load center distance	c	in	24	24	24
1.8	Load distance, center of front axle to fork	x	in	16.7	16.7	16.7
1.9	Wheelbase	y	in	57	57	57
Weights						
2.1	Service Weight		lb	8,694	9,556	10,098
2.2	Axle Loading, Loaded Front/Rear		lb	12,151 / 1,547	13,666 / 1,889	14,715 / 1,887
2.3	Axle Loading, Unloaded Front/Rear		lb	3,570 / 5,124	3,376 / 6,180	3,563 / 6,536
Wheels, Chassis						
3.1	Tires: Solid Rubber(V), Superelastic(SE), Pneumatic(P), Polyurethane(PE)			Cushion	Cushion	Cushion
3.2	Tires Size, Front (Φ X Width)			21x7x15	21x8x15	21x8x15
3.3	Tires Size, Rear (Φ X Width)			16x6x10.5	16x6x10.5	16x6x10.5
3.5	Wheels, Number Front Rear (x=Driven Wheels)			2x2	2x2	2x2
3.6	Track Width, Front	b10	In	35.1	35.7	35.7
3.7	Track Width, Rear	b11	in	35.8	35.8	35.8
Basic Dimensions						
4.1	Mast/Fork Carriage Tilt Forward / Backward		deg	6/10	6/10	6/10
4.2	Lowered Mast Height	h1	In	84	84	86.8
4.3	Free Lift	h2	In	37.5	37.5	40
4.4	Lift Height	h3	In	185	185	185
4.5	Extended Mast Height	h4	In	231	231	231
4.7	Overhead Load Guard (Cab) Height	h5	In	81.3	81.3	81.3
4.8	Seat Height / Standing Height	h7	In	45.2	45.2	45.2
4.12	Draw Bar Pin	h10	In	11.2	11.2	11.2
4.20	Length to Face of Forks	l2	In	89.8	92.2	93.9
4.21	Overall Width	b1	in	42.1	43.7	43.7
4.22	Fork Dimensions	l x e x s	in	1.8 x 3.9 x 41.3	1.8 x 3.9 x 41.3	1.8 x 3.9 x 41.3
4.23	Fork Carriage ISO 2328, Class / Type A,B			II/A	III/A	III/A
4.24	Fork-Carriage Width (with backrest)	b3	in	40.2	40.2	40.2
4.31	Ground Clearance, Under Mast	m1	in	3.5	3.5	3.5
4.32	Ground Clearance, Centre of Wheelbase	m2	In	4.6	4.6	4.6
4.33	Aisle Width for Pallets 1000x1200 Crossways	Ast	in	144.0	145.9	146.7
4.34	Aisle Width for Pallets 800x1200 Lengthways	Ast	in	151.9	153.8	154.6
4.35	Turning Radius	Wa	in	80.0	82.0	82.7
4.36	Smallest Pivot Point Distance	b13	in	23.4	23.4	23.4
Performance Data						
5.1	Travel Speed, Loaded / Unloaded		mph	9.2 / 9.7	9.2 / 9.6	9.2/ 9.6
5.2	Lift Speed, Loaded / Unloaded		mph	117 / 121	117 / 121	97 / 100
5.3	Lowering Speed, Loaded /Unloaded		ft/min	112 / 112	112 / 112	94 / 94
5.6	Max. Drawbar Pull, Loaded / Unloaded S2 5min		lb	6,068 / 6,048	6,020 / 6,022	6,020 / 6,022
5.8	Max. Gradient Performance, Loaded / Unloaded S2 5min		%	41.5 / 21.6	35.4 / 18.6	35.4 / 18.6
5.10	Service Brake			hydr.	hydr.	hydr.

25LC-9

Mast Type		Maximum Fork Height	Overall Height (Lowered)	Free Lift Height		Mast Tilt Angle		Load capacity without Sideshift	Load capacity with Sideshift	Truck Weight (Unloaded)
				With Load Backrest	Without Load Backrest	Fwd	Bwd	24in LC	24in LC	
		in	in	in	in	deg	deg	lb	lb	lb
2 Stage Limited Free Li ft	V290	82.3	60.2	4.5	4.5	10	6	5,000	5,000	8,184
	V300	118.1	78.1			6	10	5,000	5,000	8,210
	V330	129.9	84			6	10	5,000	5,000	8,250
	V350	137.8	87.9			6	10	5,000	5,000	8,290
	V370	145.7	93.9			6	10	5,000	5,000	8,339
	V400	157.4	99.8			6	10	5,000	5,000	8,405
	V450	177.2	111.6			6	5	5,000	4,900	8,568
3 Stage Full Free Lift	TF430	169.3	78.2	31.7	54.2	6	5	4,890	4,790	8,597
	TF450	177.2	82.1	35.6	58.1	6	5	4,830	4,740	8,645
	TF470	185	84.1	37.6	60.1	6	5	4,760	4,680	8,676
	TF500	196.9	87.9	41.5	64.1	6	5	4,650	4,570	8,724
	TF550	216.5	95.9	49.4	71.9	6	5	4,480	4,400	8,809
	TF600	236.2	103.7	57.3	79.8	6	5	3,750	3,740	8,951
	TF650	256.1	111.6	65.2	83.6	3	3	3,640	2,480	9,050
	TF700	275.8	119.5	73	91.5	3	3	2,430	2,180	9,126
4 Stage Full Free Lift	QF610	240.7	83.5	37	59.5	3	3	3,280	3,170	8,686
	QF700	276.2	95.3	48.8	71.3	3	3	2,910	2,800	8,854

30LC-9

Mast Type		Maximum Fork Height	Overall Height (Lowered)	Free Lift Height		Mast Tilt Angle		Load capacity without Sideshift	Load capacity with Sideshift	Truck Weight (Unloaded)
				With Load Backrest	Without Load Backrest	Fwd	Bwd	24in LC	24in LC	
		in	in	in	in	deg	deg	lb	lb	lb
2 Stage Limited Free Li ft	V290	82.3	60.2	4.5	4.5	10	6	6,000	6,000	9,218
	V300	118.1	78.1			6	8	6,000	6,000	9,068
	V330	129.9	84.0			6	8	6,000	6,000	9,110
	V350	137.8	87.9			6	8	6,000	6,000	9,148
	V370	145.7	93.9			6	8	6,000	6,000	9,196
	V400	157.4	99.8			6	8	6,000	6,000	9,262
	V450	177.2	111.6			6	5	5,930	5,840	9,425
3 Stage Full Free Lift	TF430	169.3	78.2	31.7	51.7	6	5	5,790	5,670	9,453
	TF450	177.2	82.1	35.6	55.7	6	5	5,680	5,620	9,502
	TF470	185	84.1	37.6	57.6	6	5	5,620	5,560	9,533
	TF500	196.9	87.9	41.5	61.6	6	5	5,510	5,450	9,581
	TF550	216.5	95.9	49.4	69.4	6	5	5,350	5,230	9,667
	TF600	236.2	103.7	57.3	77.3	6	5	3,860	3,850	9,810
	TF650	256.1	111.6	65.2	83.6	3	3	3,750	3,190	9,907
	TF700	275.8	119.5	73	91.5	3	3	2,540	2,420	9,984
4 Stage Full Free Lift	QF610	240.7	83.5	37	57	3	3	3,680	3,480	9,544
	QF700	276.2	95.3	48.8	68.9	3	3	3,060	2,910	9,714

33LC-9

Mast Type		Maximum Fork Height	Overall Height (Lowered)	Free Lift Height		Mast Tilt Angle		Load capacity without Sideshift	Load capacity with Sideshift	Truck Weight (Unloaded)
				With Load Backrest	Without Load Backrest	Fwd	Bwd	24in LC	24in LC	
		in	in	in	in	deg	deg	lb	lb	lb
2 Stage Limited Free Li ft	V300	118.1	79.2	4.5	4.5	6	10	6,500	6,500	9,557
	V330	129.9	86.8			6	10	6,500	6,450	9,601
	V350	137.8	90.7			6	10	6,500	6,350	9,644
	V370	145.7	96.7			6	10	6,500	6,250	9,696
	V400	157.4	102.6			6	10	6,500	6,250	9,766
	V450	177.2	114.4			6	5	6,330	5,950	9,936
3 Stage Full Free Lift	TF430	169.3	80.9	34.4	52.4	6	5	6,150	5,900	9,989
	TF450	177.2	84.8	38.4	56.4	6	5	6,080	5,850	10,045
	TF470	185.0	86.8	40.4	58.3	6	5	6,000	5,800	10,077
	TF500	196.9	90.7	44.3	62.3	6	5	5,890	5,650	10,127
	TF550	216.5	98.6	52.2	70.2	6	5	5,710	5,500	10,222
	TF600	236.2	106.5	60.0	78.0	6	5	3,970	3,520	10,375
	TF650	256.1	114.4	65.2	83.6	3	3	3,860	2,190	10,481
	TF700	275.8	122.2	73.0	91.5	3	3	2,650	2,970	10,576
4 Stage Full Free Lift	QF610	240.7	85.4	39.0	57	3	3	3,900	3,650	9,859
	QF700	276.2	97.2	50.8	68.9	3	3	3,280	3,100	10,027

Load Capacity

25LC-9	30LC-9	33LC-9

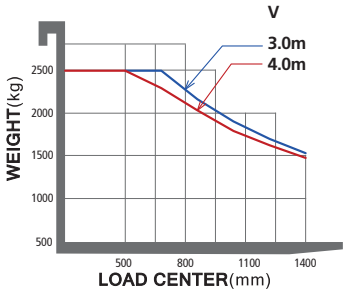

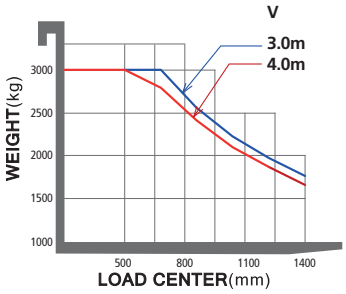

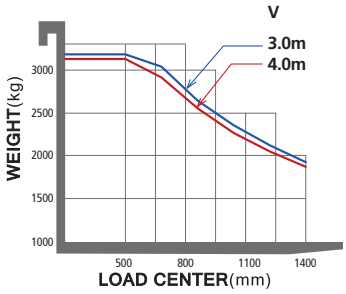

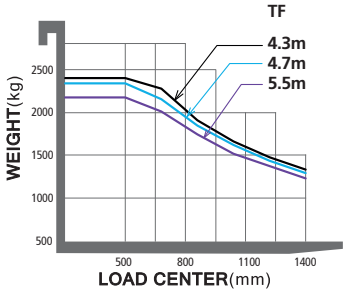

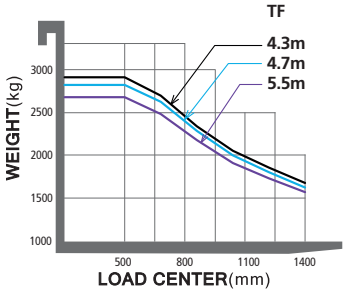

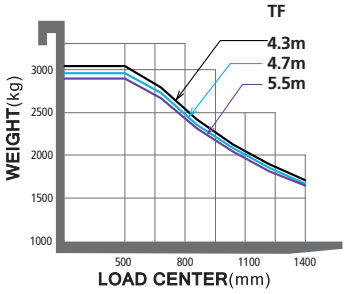

Standard & Optional Features

		Details	25LC-9	30LC-9	33LC-9
OPERATOR'S AREA	OHG	Standard Overhead Guard	●	●	●
	Seat	Grammer Full Suspension HiViz Seat Belt, Arm rest	●	●	●
	Lever	Seat - Side Mounted Hydraulic Control	●	●	●
	Handle	Rear Grab Handle w/ Horn Button	●	●	●
MAST	Mast	Standard Mast	TF470	TF470	TF470
		2, 3, 4 stage Mast	○	○	○
		Bottler tilt (10°/5°) Option code : FFL04	○	○	○
	Fork	Fork Options - 900mm~2,100mm Fork	○	○	○
	Carriage	Hook Type Carriage	●	●	●
	Attachment	Side Shift	○	○	○
		Integral Side Shift	○	○	○
HYDRAULICS	MCV & Hoses	3 Spool MCV + attached piping for TF Mast	●	●	●
		MCV Options - 4 Spool	○	○	○
		Attached Piping for All MCVs & Masts	○	○	○
TIRES	Tires	Cushion Tires	●	●	●
		Tire Options - Non Marking Tires	○	○	○
VISIBILITY	Lamp	Front LED	●	●	●
		Working Lamp , Front & Rear LED	○	○	○
	Mirror	Panorama Mirror	●	●	●
		Mirror Options - L/H & R/H Back Mirror & Panorama Mirror	○	○	○

		Details	25LC-9	30LC-9	33LC-9
CONVENIENCE		Auto Tilt	○	○	○
		Load Weight Indicator	●	●	●
		1st Function Hydraulic Control Knob	●	●	●
		Hydraulic Accumulator	○	○	○
		Hydraulic Quick Disconnect	○	○	○
		Low LPG Alarm	○	○	○
SAFETY		Seat Belt Interlock	○	○	○
		LED Beacon Lamp	●	●	●
		Blue Projection Light	○	○	○
		Speed Control - Max. 8km/hr	○	○	○
OTHERS		Master Switch for Battery Disconnect	●	●	●
		Pre-Cleaner	○	○	○
		Oil - VG46	○	○	○
		Oil Options - VG32 for Tropical, VG15 for Cold Area	○	○	○
		Hi-MATE (General)	○	○	○
		Hi-MATE (Premium)	○	○	○
		High Velocity Fan & Radiator Screen	○	○	○
		Radiator Screen (Wire Net)	○	○	○
		Swing Out (One-Band) LPG Bracket	○	○	○
		Swing Down LPG Bracket	○	○	○

● STD / ○ OPT

ELEVEX™ Material Handling Solutions

MONTREAL (Head office)
19151 A, Cruickshank Avenue
Baie-D'Urfé (Québec) H9X 3N9

Phone: 418 694-4223
Toll free: 1 866 421-4223
info@elevex.ca

SAGUENAY
2305, Alexis-Le-Trotteur
St. Jonquière (Québec) G7X 9H8

elevex.ca

NO ONE
DELIVERS MORE

HD HYUNDAI XITESOLUTION | MATERIAL HANDLING