35/40/45D-9, 50DA-9

8,000-11,000 lbs. capacities

Diesel · Pneumatic Tire

HYUNDAI
MATERIAL HANDLING
NO ONE DELIVERS MORE

ELEVEX™
Material Handling Solutions

MORE POWER.
MORE PERFORMANCE.
MORE OF WHAT YOU NEED
IN ANY WORK ENVIRONMENT.

Get more of what you're looking for:
THE 35, 40, 45D-9, 50DA-9 FROM HYUNDAI

When it comes to your toughest jobs you need a forklift that offers you more than just brute strength. The Hyundai 9 Series diesels are engineered to bring you outstanding performance matched with greater reliability and the durability to withstand even the most demanding environments. At the heart of the 9 Series is a powerful, proven Cummins engine that meets all EPA Tier 4 and EU Stage IV emissions regulations while delivering outstanding travel and lift/lower speeds.

But when you take a deeper dive into the 9 Series, you discover a machine built for greater operator comfort, simpler servicing, and maximum productivity and profitability in every application.

POWERFUL, PROVEN CUMMINS DIESEL

The 101 HP Cummins QSF3.8 turbocharged engine is built for power, reliability, and economy. Beyond low emissions, it delivers:

- High torque at low RPMs
- Outstanding gradeability
- Fast travel speeds up to 16.5 MPH
- Excellent fuel economy

SPACIOUS OPERATOR'S CABIN

Our deluxe cab provides more space for operators, with a low entrance height for easy entry and exit, outstanding visibility all around, plus:

- Grammer™ full suspension seat
- Low effort, quick response control levers
- Optimized pedal positions
- Adjustable, tilting steering wheel

ADVANCED, INFORMATION RICH CLUSTER

The dash display consolidates important equipment information, real-time data, onboard diagnostics, data logging, safety features, maintenance tracking and more for complete system control. All information is clearly displayed for easy reading by your operators and includes an optional weight indicator for added safety.

RUGGED DRIVE AXLE

Designed to withstand years of punishing service, the drive axle includes an innovative ring gear that reduces noise and virtually maintenance-free wet disc brakes for more consistent braking. The drive axle is paired with a durable, smooth shifting transmission that offers reduced vibration with less maintenance.

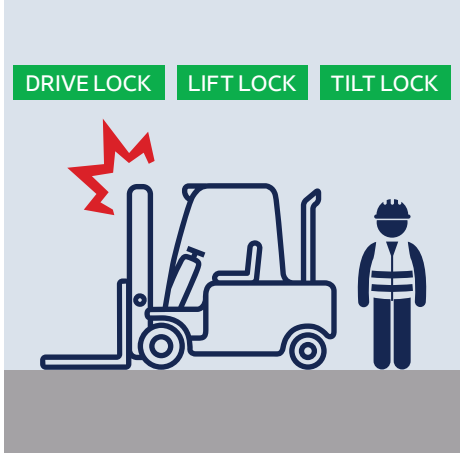

OPERATOR PRESENCE SENSING SYSTEM

For maximum safety, the 9 Series features an advanced Operator Presence Sensing System that requires the operator to be in the seat to have the use of the travel and hydraulic functions, including tilt, lift and lower. Another key safety feature is an overhead guard that exceeds CEE and ANSI regulations.

HYDROSTATIC POWER STEERING

The fully hydrostatic power steering provides smooth and precise handling and outstanding control.

MAINTENANCE MANAGEMENT

Displayed on the dash, this indicator alerts operators and technicians when maintenance items need to be replaced before a possible failure.

The 9 Series brings you even more advantages.

- An easy lifting hood reveals a large workspace for faster, easier servicing and reduced downtime
- Maximum speed limit function allows operators to set safe speed limits without affecting lift speeds and acceleration
- Optional load weight indicator provides a digital readout of the load weight and warns if the maximum capacity is reached
- Halogen headlights and rear LED lights offer superior illumination of the workplace for added safety
- Machine inclination warning system provides grade and slope status information for greater operating safety
- Standard panoramic mirror package expands the driver's view when backing up
- Password setting function prevents unauthorized use and theft
- Optional rear-view camera and monitor helps ensure a safer working environment
- Down safety valve prevents forks from dropping in the event of damage to the hydraulic line
- Standard rear tire cover protects the radiator and other key components from damage caused by foreign materials

ONLY HYUNDAI OFFERS YOU SUCH A COMPREHENSIVE, FULLY INTEGRATED TELEMATICS SYSTEM.

HI-MATE MANAGEMENT SYSTEM

Hi-Mate is one of the industry's most advanced remote management system. With continuous data collection, Hi-Mate delivers more communication, control, and ability to track, monitor, maintain, and manage your forklift fleet. It is the proven way to efficiently coordinate both your equipment and human resources.

Hi-Mate works by collecting key data from sensors mounted to your equipment that track operation of the forklift, relaying that information to your computer or mobile device in real time. By monitoring key components, such as the engine, electric system, and hydraulics, Hi-Mate can help you evaluate machine and operator performance, create preventive maintenance programs, and help you minimize downtime as you maximize productivity.

Equipment operation management

Real-time monitoring and follow-up management of individual pieces of equipment or equipment fleet deliver essential operational status and information, including:

- Key-on time, travel hours, work hours, and GPS location

Equipment status management

Vital diagnostic and maintenance data is relayed as alerts, while Hi-Mate Premium provides tracking of pre-shift checklists to help reduce downtime and ensure OSHA compliance:

- Alerts are sent for DTCs, system warning, and required maintenance

Safe traveling control

An impact monitor provides alerts, accountability, and follow-up management of safety incidents involving equipment during operation:

- The system logs the number and severity of impacts as well as the operator who was logged into the unit at the time of the incident

Human resource management

Hi-Mate Premium can control who operates equipment via a pin pad and RFID reader:

- Provided information can be used to evaluate productivity, efficiency, and workforce safety
- Tracking the weight load indicator captures operator productivity

Data Flow

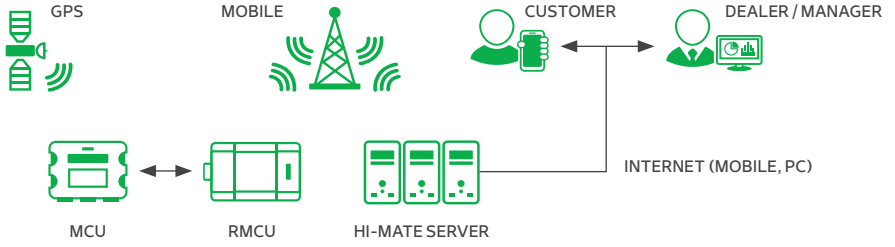

Dimensions

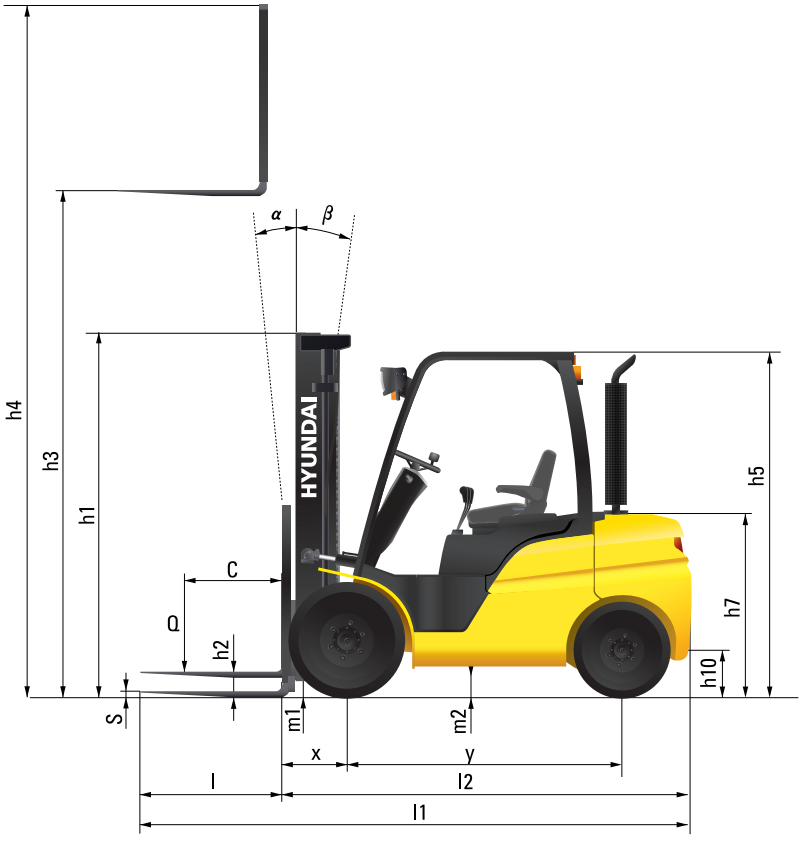

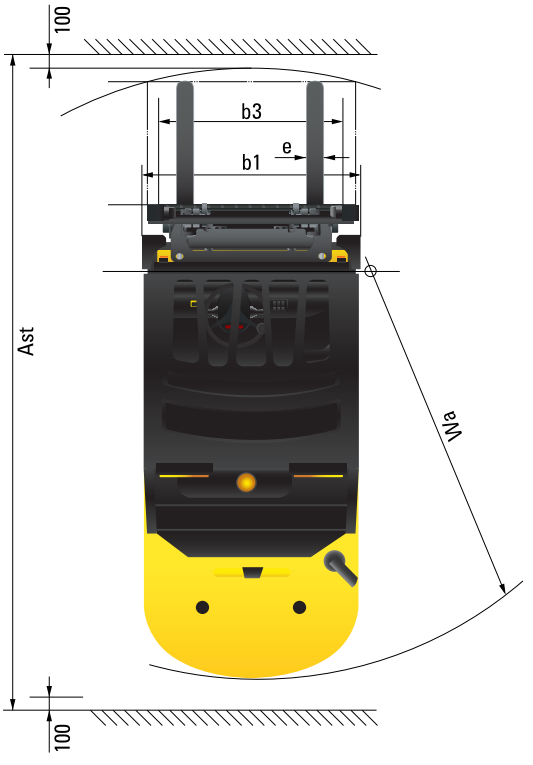

Specifications

Identification								
1.1	Manufacturer				Hyundai			
1.2	Manufacturer's Type Designation				35D-9	40D-9	45D-9	50DA-9
1.3	Drive: Electric (Battery or Mains), Diesel, Petrol, Fuel Gas, Manual				Diesel	Diesel	Diesel	Diesel
1.4	Type of Operation : Hand, Pedestrian, Standing, Seated, Order-Picker				Seated	Seated	Seated	Seated
1.5	Load Capacity / Rated Load		Q	lb	8,000	9,000	10,000	11,000
1.6	Load Center Distance		c	in	24	24	24	24
1.8	Load Distance, Center of Front Axle to Fork		x	in	22	22	22	22.6
1.9	Wheelbase		y	in	78.8	78.8	78.8	78.7
Weights								
2.1	Service Weight			lb	13,082.23	14,294.7	15,211.9	16,131.2
2.2	Axle Loading, Loaded Front/Rear			lb	17,947.8 / 2,850.5	20,077.5 / 3,033.5	21,805.9 / 3,326.7	2,354.1 / 3,611.2
2.3	Axle Loading, Unloaded Front/Rear			lb	5,756.3 / 7,325.9	6,144.2 / 8,148.2	6,131 / 9,080.8	6,124.4 / 10,004.5
Wheels, Chassis								
3.1	Tires				Pneumatic	Pneumatic	Pneumatic	Pneumatic
3.2	Tires Size, Front (ø x Width)	Single			8.25 x 15 x 14PR	300 x 15 x 18PR	300 x 15 x 18PR	300 x 15 x 18PR
		Double			7.5 x 16 x 12PR	7.5 x 16 x 12PR	7.5 x 16 x 12PR	7.5 x 16 x 12PR
3.3	Tires Size, Rear (ø x Width)				7 x 12 x 14PR	7 x 12 x 14PR	7 x 12 x 14PR	7 x 12 x 14PR
3.4	Wheels, Number Front Rear (x=Driven Wheels)				2 x 2	4 x 2	4 x 2	4 x 2
3.6	Track Width, Front	Single		In	44.5	44	44	44
		Double		in	50.4	50.4	50.4	50.4
3.7	Track Width, Rear			in	44.9	44.8	44.8	44.8
Basic Dimensions								
4.1	Mast/Fork Carriage Tilt Forward / Backward			deg	8 / 10	8 / 10	8 / 10	8 / 10
4.2	Lowered Mast Height		h1	In	87.9	87.4	87.4	87.4
4.3	Free Lift		h2	In	4.7	4.7	4.7	4.7
4.4	Lift Height		h3	In	118.8	118.8	118.8	115.3
4.5	Extended Mast Height		h4	In	166.6	166.6	166.6	163.2
4.7	Overhead Load Guard (Cab) Height		h5	In	92.52 (92.91)	92.13 (92.52)	92.13 (92.52)	92.13 (92.52)
4.8	Seat Height / Standing Height		h7	In	51.6	51.1	51.1	51.1
4.12	Coupling Height		h10	In	14.8	14.8	14.9	14.8
4.19	Overall Length		l1	in	169	169	176.5	177.1
4.20	Length to Face of Forks		l2	In	127	127	128.6	130
4.21	Overall Width	Single	b1	in	53.9	55.8	55.8	55.8
		Double	b1	in	68.7	68.7	68.7	68.7
4.22	Fork Dimensions / Hook Type		L x W x H	in	42 x 4.8 x 2	42 x 4.8 x 2	48 × 5.9 × 1.9	47.2 × 5.9 × 1.9
4.23	Fork Carriage ISO 2328, Class / Type A,B				III / A	III / A	IV / A	IV / A
4.24	Fork-Carriage Width		b3	in	51.1	62.9	62.9	62.9
4.31	Ground Clearance, Loaded, Under Mast		m1	in	6.7	6.1	6.1	6.1
4.32	Ground Clearance, Center of Wheelbase		m2	In	6.4	6.2	6.1	6.1
4.33	Aisle Width for Pallets 39.3 x 47.2 Crossways		Ast	in	185.4	185.4	187	188.3
4.34	Aisle Width for Pallets 31.5 x 47.2 Lengthways		Ast	in	193.3	193.3	194.9	196.2
4.35	Turning Radius		Wa	in	116.1	116.1	117.7	118.4
4.36	Smallest Pivot Point Distance			in	39.7	39.7	39.7	39.7
Performance Data								
5.1	Travel Speed, Loaded / Unloaded (80v)			mph	15.3 / 16.6	15.1 / 16	15 / 15.9	14.9 / 15.9
5.2	Lift Speed, Loaded / Unloaded (80v)			fpm	100 / 106	98 / 106	96 / 106	83 / 91
5.3	Lowering Speed, Loaded / Unloaded			fpm	99 / 89	98 / 106	99 / 99	99 / 89
5.6	Max. Drawbar Pull, Loaded / Unloaded			lbf	8,751 / 8,295	8,806 / 8,566	8,818 / 8,547	8,833 / 8,529
5.7	Max. Gradeability, Loaded / Unloaded			%	40.9 / 24	36.4 / 23.6	33.2 / 22.1	30.6 / 20.8
5.10	Service Brake				Hydraulic	Hydraulic	Hydraulic	Hydraulic
Engine								
6.1	Engine Manufacturer / Type				CUMMINS QSF3.8	CUMMINS QSF3.8	CUMMINS QSF3.8	CUMMINS QSF3.8
6.2	Engine Power Acc. to ISO 1585			hp / rpm	100.6 / 2,200	100.6 / 2,200	100.6 / 2,200	100.6 / 2,200
6.3	Maximum Torque			lbf / rpm	306 / 1,600	306 / 1,600	306 / 1,600	306 / 1,600
6.4	Number of Cylinders / Displacement			EA/cc	4 / 3,726	4 / 3,726	4 / 3,726	4 / 3,726
Additional Data								
8.1	Type of Drive Control				Power Shift 2/2	Power Shift 2/2	Power Shift 2/2	Power Shift 2/2
8.2	Operating Pressure, System / Attachments			psi	3,000 / 2,130	3,000 / 2,130	3,000 / 2,130	3,000 / 2,130
8.3	Oil volume for attachments			gpm	20	20	20	20

* All specifications in this catalog are subject to change according to the optional items.

35D-9

Mast Type		Maxi-mum Fork Height	Overall Height (Lowered)		Free Lift Height		Mast Tilt Angle		Load capacity w/o Sideshift		Load capacity with Sideshift		Truck Weight (Unloaded)	
					With Load Backrest	W/o Load Backrest	Fwd	Bwd	Single Tire 24 in LC	Dual tire 24 in LC	Single Tire 24 in LC	Dual Tire 24 in LC	Single Tire	Dual Tire
		in	Single Tire	Dual Tire	in	in	deg	deg	lb	lb	lb	lb	lb	lb
2-Stage Limited Free Lift	V270	07.1	82.1	81.5	4.7	4.7	8	10	8,000	8,000	8,000	8,000	12,989	13,330
	V300*	118.9	88.0	87.4	4.7	4.7	8	10	8,000	8,000	8,000	8,000	13,055	13,396
	V330	130.7	93.9	93.3	4.7	4.7	8	10	8,000	8,000	8,000	8,000	13,138	13,479
	V350	138.6	99.8	99.2	4.7	4.7	8	10	8,000	8,000	8,000	8,000	13,189	13,530
	V370	146.5	103.7	103.1	4.7	4.7	8	10	8,000	8,000	8,000	8,000	13,233	13,574
	V400	158.3	112.0	111.4	4.7	4.7	8	10	8,000	8,000	7,480	7,590	13,325	13,666
	V430	170.1	117.9	117.3	4.7	4.7	8	10	8,000	8,000	7,370	7,480	13,391	13,732
	V450	178.0	121.9	121.3	4.7	4.7	8	6	8,000	8,000	7,260	7,370	13,574	13,915
	V500	197.6	131.7	131.1	4.7	4.7	8	6	7,480	8,000	7,040	7,150	13,686	14,027
2-Stage Full Free Lift	VF280	110.4	84.1	83.5	36.7	49.5	8	8	8,000	8,000	8,000	8,000	13,079	1,3413
	VF300	118.3	88.0	87.4	40.6	53.5	8	8	8,000	8,000	8,000	8,000	13,136	13,471
	VF315	124.2	91.5	90.9	44.1	57.0	8	8	8,000	8,000	8,000	8,000	13,178	13,515
3-Stage Full Free Lift	TF/TS370	146.9	80.1	79.5	32.4	45.2	8	8	8,000	8,000	7,370	7,590	13,554	13,895
	TF/TS400	158.7	84.1	83.5	36.3	49.2	8	8	8,000	8,000	7,260	7,480	13,620	13,961
	TF/TS430	170.5	88.0	87.4	40.2	53.1	8	8	8,000	8,000	7,150	7,370	13,688	14,029
	TF/TS450	177.6	90.4	90.2	42.6	55.5	8	8	8,000	8,000	7,040	7,260	13,730	14,071
	TF/TS470	185.8	93.9	94.1	46.1	59.0	8	8	7,480	8,000	6,930	7,150	13,809	14,150
	TF/TS500	197.6	97.8	97.2	50.1	63.0	8	6	7,260	7,480	6,820	7,040	13,860	14,201
	TF/TS550	217.3	104.9	104.3	57.2	70.0	8	6	7040,	7,260	6,270	6,820	13,994	14,335
	TF/TS600	237.4	112.0	111.4	64.3	77.1	8	6	6,820	7040,	5,390	6,600	14,146	14,487
	TF/TS650	257.5	119.1	118.5	71.3	84.2	8	6	6,600	6,600	5,170	6,380	14,236	14,577

35D-9

Mast Type		Maxi-mum Fork Height	Overall Height (Lowered)		Free Lift Height		Mast Tilt Angle		Load capacity w/o Sideshift		Load capacity with Sideshift		Truck Weight (Unloaded)	
					With Load Backrest	W/o Load Backrest	Fwd	Bwd	Single Tire 24 in LC	Dual tire 24 in LC	Single Tire 24 in LC	Dual Tire 24 in LC	Single Tire	Dual Tire
		in	Single Tire	Dual Tire	in	in	deg	deg	lb	lb	lb	lb	lb	lb
2-Stage Limited Free Lift	V270	107.1	82.1	81.5	4.7	4.7	8	10	9,000	9,000	9,000	9,000	13,966	14,199
	V300*	118.9	88.0	87.4	4.7	4.7	8	10	9,000	9,000	9,000	9,000	14,032	14,265
	V330	130.7	93.9	93.3	4.7	4.7	8	10	9,000	9,000	9,000	9,000	14,115	14,348
	V350	138.6	99.8	99.2	4.7	4.7	8	10	9,000	9,000	9,000	9,000	14,166	14,399
	V370	146.5	103.7	103.1	4.7	4.7	8	10	9,000	9,000	8,888	8,888	14,210	14,443
	V400	158.3	112.0	111.4	4.7	4.7	8	10	9,000	9,000	8,775	8,775	14,304	14,538
	V430	170.1	117.9	117.3	4.7	4.7	8	10	9,000	9,000	8,663	8,663	14,368	14,601
	V450	178.0	121.9	121.3	4.7	4.7	8	6	9,000	9,000	8,550	8,550	14,551	14,784
	V500	197.6	131.7	131.1	4.7	4.7	8	6	8,775	9,000	8,325	8,325	14,663	14,896
2-Stage Full Free Lift	VF280	110.4	84.1	83.5	36.1	48.9	8	8	9,000	9,000	9,000	9,000	14,056	14,282
	VF300	118.3	88.0	87.4	40.0	52.9	8	8	9,000	9,000	9,000	9,000	14,113	14,340
	VF315	124.2	91.5	90.9	43.5	56.4	8	8	9,000	9,000	9,000	9,000	14,155	14,381
3-Stage Full Free Lift	TF/TS370	146.9	80.1	79.5	31.8	44.6	8	8	9,000	9,000	8,775	8,888	14,531	14,687
	TF/TS400	158.7	84.1	83.5	35.7	48.6	8	8	9,000	9,000	8,663	8,663	14,597	14,753
	TF/TS430	170.5	88.0	87.4	39.6	52.5	8	8	9,000	9,000	8,550	8,550	14,665	14,821
	TF/TS450	177.6	90.4	90.2	42.0	54.9	8	8	9,000	9,000	8,550	8,550	14,707	14,863
	TF/TS470	185.8	93.9	94.1	45.6	58.4	8	8	9,000	9,000	8,325	8,438	14,786	14,942
	TF/TS500	197.6	97.8	97.2	49.5	62.4	8	6	8,775	8,775	8,100	8,213	14,837	14,993
	TF/TS550	217.3	104.9	104.3	56.6	69.4	8	6	8,325	8,550	7,370	7,700	14,971	15,127
	TF/TS600	237.4	112.0	111.4	63.7	76.5	8	6	7,920	7,920	6,490	7,480	15,123	15,279
	TF/TS650	257.5	119.1	118.5	70.7	83.6	8	6	7,700	7,700	6,270	7,260	15,213	15,369

*Standard

45D-9

Mast Type		Maximum Fork Height	Overall Height (Lowered)		Free Lift Height		Mast Tilt Angle		Load capacity w/o Sideshift		Load capacity with Sideshift		Truck Weight (Unloaded)	
					With Load Backrest	W/o Load Backrest	Fwd	Bwd	Single Tire	Dual tire	Single Tire	Dual Tire	Single Tire	Dual Tire
									24 in LC	24 in LC	24 in LC	24 in LC		
		in	Single Tire	Dual Tire	in	in	deg	deg	lb	lb	lb	lb	lb	lb
2-Stage Limited Free Lift	V270	107.1	82.1	81.5	4.7	4.7	8	10	8,000	8,000	8,000	8,000	12,989	13,330
	V300*	118.9	88.0	87.4	4.7	4.7	8	10	8,000	8,000	8,000	8,000	13,055	13,396
	V330	130.7	93.9	93.3	4.7	4.7	8	10	8,000	8,000	8,000	8,000	13,138	13,479
	V350	138.6	99.8	99.2	4.7	4.7	8	10	8,000	8,000	8,000	8,000	13,189	13,530
	V370	146.5	103.7	103.1	4.7	4.7	8	10	8,000	8,000	8,000	8,000	13,233	13,574
	V400	158.3	112.0	111.4	4.7	4.7	8	10	8,000	8,000	7,480	7,590	13,325	13,666
	V430	170.1	117.9	117.3	4.7	4.7	8	10	8,000	8,000	7,370	7,480	13,391	13,732
	V450	178.0	121.9	121.3	4.7	4.7	8	6	8,000	8,000	7,260	7,370	13,574	13,915
	V500	197.6	131.7	131.1	4.7	4.7	8	6	7,480	8,000	7,040	7,150	13,686	14,027
2-Stage Full Free Lift	VF280	110.4	84.1	83.5	36.7	49.5	8	8	8,000	8,000	8,000	8,000	13,079	13,413
	VF300	118.3	88.0	87.4	40.6	53.5	8	8	8,000	8,000	8,000	8,000	13,136	13,471
	VF315	124.2	91.5	90.9	44.1	57.0	8	8	8,000	8,000	8,000	8,000	13,178	13,515
3-Stage Full Free Lift	TF/TS370	146.9	80.1	79.5	32.4	45.2	8	8	8,000	8,000	7,370	7,590	13,554	13,895
	TF/TS400	158.7	84.1	83.5	36.3	49.2	8	8	8,000	8,000	7,260	7,480	13,620	13,961
	TF/TS430	170.5	88.0	87.4	40.2	53.1	8	8	8,000	8,000	7,150	7,370	13,688	14,029
	TF/TS450	177.6	90.4	90.2	42.6	55.5	8	8	8000,	8,000	7,040	7,260	13,730	14,071
	TF/TS470	185.8	93.9	94.1	46.1	59.0	8	8	7,480	8,000	6,930	7,150	13,809	14,150
	TF/TS500	197.6	97.8	97.2	50.1	63.0	8	6	7,260	7,480	6,820	7,040	13,860	14,201
	TF/TS550	217.3	104.9	104.3	57.2	70.0	8	6	7,040	7,260	6,270	6,820	13,994	14,335
	TF/TS600	237.4	112.0	111.4	64.3	77.1	8	6	6,820	7,040	5,390	6,600	14,146	14,487
	TF/TS650	257.5	119.1	118.5	71.3	84.2	8	6	6,600	6,600	5,170	6,380	14,236	14,577

50DA-9

Mast Type		Maximum Fork Height	Overall Height (Lowered)		Free Lift Height		Mast Tilt Angle		Load capacity w/o Sideshift		Load capacity with Sideshift		Truck Weight (Unloaded)	
					With Load Backrest	W/o Load Backrest	Fwd	Bwd	Single Tire	Dual tire	Single Tire	Dual Tire	Single Tire	Dual Tire
									24 in LC	24 in LC	24 in LC	24 in LC		
		in	Single Tire	Dual Tire	in	in	deg	deg	lb	lb	lb	lb	lb	lb
2-Stage Limited Free Lift	V290*	115.4	88.0	87.4	4.7	4.7	8	10	11,000	11,000	11,000	11,000	15,842	16,097
	V320	127.2	93.9	93.3	4.7	4.7	8	10	11,000	11,000	11,000	11,000	15,897	16,152
	V360	142.9	103.7	103.1	4.7	4.7	8	10	11,000	11,000	10,780	10,780	15,987	16,243
	V390	154.7	112.0	111.4	4.7	4.7	8	10	11,000	11,000	10,560	10,560	16,067	16,320
	V440	174.4	121.9	121.3	4.7	4.7	8	6	10,780	11,000	10,230	10,230	16,293	16,548
	V490	194.1	131.7	131.1	4.7	4.7	8	6	10,560	10,780	9,900	9,900	16,386	16,641
3-Stage Full Free Lift	TF390	156.4	84.1	83.5	35.7	46.2	8	8	11,000	11,000	10,230	10,340	16,379	16,608
	TF/TS420	168.2	88.0	87.4	39.6	50.2	8	8	10,780	11,000	10,010	10,120	16,434	16,663
	TF440	175.3	90.4	89.8	42.0	52.5	8	8	10,560	11,000	9,900	10,010	16,471	16,698
	TF/TS460	183.5	93.9	93.3	45.5	56.1	8	8	10,340	10,780	9,790	9,900	16,522	16,751
	TF490	195.4	97.8	97.2	49.5	60.0	8	6	10,120	10,560	9,570	9,790	16,577	16,806
	TF/TS540	215.0	104.9	104.3	56.6	67.1	8	6	9,900	10,340	9,350	9,460	16,691	16,920
	TF590	235.1	112.0	111.4	63.6	74.2	8	6	9,680	10,120	9,020	9,240	16,782	17,008
	TF640	255.2	119.1	118.5	70.7	81.3	8	6	9,460	9,900	8,800	9,020	16,872	17,101

Load Capacity

35D-9

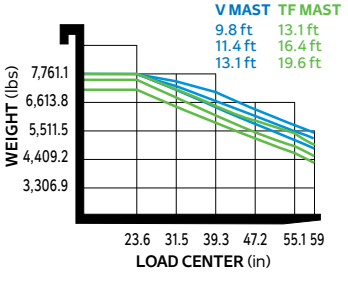

40D-9

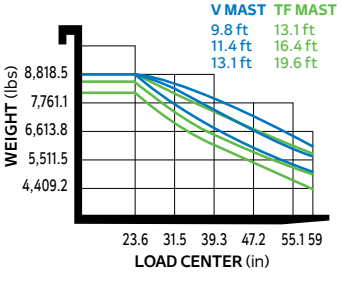

45D-9

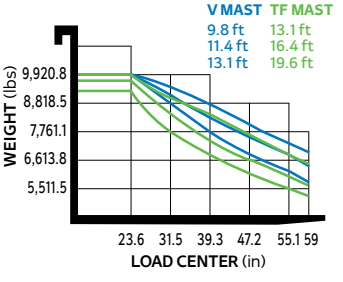

50DA-9

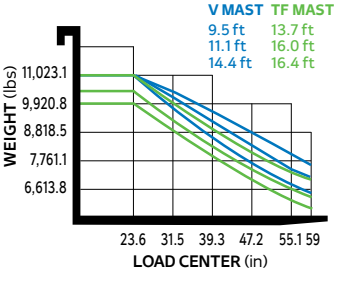

35/40/45D-9, 50DA-9 Series Options

ENGINE	STD	OPT
CUMMINS QSF 3.8 Engine	●	
EGR (exhaust gas recirculation)	●	
SCR (selective catalyst reduction)	●	
POWER DRIVE		
Clutch Protection System	●	
Drive Axle	●	
Fully Hydrostatic Power Steering	●	
Wet Disk Brakes	●	
LOAD HANDLING		
2-Stage Wide View Mast		●
2-Stage Full Free Mast		●
3-Stage Full Free Mast		●
3-Spool/Lever Main Control Valve (option: up to 5 spool/lever)	●	
Integrated Side Shifter		●
Hook-On Side Shifter		●
Synchronized Fork-Positioner		●
Independent Fork-Positioner		●
Auto Fork Leveling System	●	
Load Sensing & Indicator	●	
Wide Type Carriage (for double tires)		●
Carriage Backrest		●
LOAD SENSING & INDICATOR		
HAC (hillstart-assistance control)		●
Fork Safety System (preventing sudden drop)	●	
Truck Inclination Warning System	●	
OPSS (operator presence sensing system)	●	
Password Starting System	●	
Maximum Speed Limit System	●	
Back-Up Alarm	●	
Rear View Camera		●

BODY	STD	OPT
Press Type Overhead Guard	●	
Flat Bar Type Overhead Guard		●
O.h.g with Raincover		●
Cabin		●
Cabin with Heater and Air-Conditioner		●
5.6" LCD Monitor	●	
Grammer Seat	●	
Grammer Full Suspention Seat		●
Belly Pan - Under Cover		●
Belly Pan - Rear Tire Mud Cover		●
Pneumatic Single Tire	●	
Solid Single Tire		●
Non-Marking Single Tire		●
Brake Booster	●	
Pre-Cleaner	●	
Panoramic Mirror	●	
Side Mirror		●
Tilt Steering Column	●	
Parking Brake Switch	●	
Rear Handle with Horn		●
Horn&Directional Switch		●
Explosion Proof		●
Oil for Special Environment (hot/cold weather)		●
Master Switch	●	
LIGHTS AND LAMPS		
Halogen Head Lights	●	
LED Rear Combination Lamps	●	
Turn Signal Lights	●	
Rear Reflectors	●	
Beacon Lamp (bulb or LED)		●

ELEVEX™
Material Handling Solutions

MONTREAL (Head office)
19151 A, Cruickshank Avenue
Baie-D'Urfé (Québec) H9X 3N9

Phone: 418 694-4223
Toll free: 1 866 421-4223
info@elevex.ca

SAGUENAY
2305, Alexis-Le-Trotteur
St. Jonquière (Québec) G7X 9H8

elevex.ca

NO ONE
DELIVERS MORE

HD HYUNDAI XITESOLUTION | MATERIAL HANDLING