15/18/20BCS-9

3,000 / 3,500 / 4,000 lbs capacities

Electric · Cushion Tire

HYUNDAI
MATERIAL HANDLING
NO ONE DELIVERS MORE

ELEVEX™
Material Handling Solutions

MORE COMFORT.
MORE CONVENIENCE.
ALL WITH MORE PRODUCTIVITY AND PERFORMANCE.

Get more of what you're looking for: THE BCS-9 FROM HYUNDAI

The Hyundai BCS-9 is engineered to efficiently navigate tight aisles and narrow spaces. But beyond outstanding maneuverability, it offers you and your operators a host of performance advantages. The controls are instinctive and allow for precise handling with less operator fatigue. There is greater visibility and a spacious operator compartment for maximum comfort and safe operation. Rugged and reliable, the AC-powered BCS-9 also includes an unsurpassed array of advanced features all designed to lower your costs as it raises your productivity and profits.

Check out all the advanced features the BCS-9 can bring your operation.

MULTIFUNCTION CLUSTER DELIVERS KEY INFORMATION

This advanced, LCD color monitor displays essential operational data in real time, including speed, accelerator level, steer angle, travel direction, battery discharge indicator, hour meter, working mode, and more. You'll find innovations everywhere:

- The load weight indicator displays the load weight and warns the operator if safe parameters are exceeded
- Self-diagnostic tools to keep the equipment safe
- High, Normal, Economy and Turtle operating modes

HIGH-PERFORMANCE LITHIUM-ION BATTERY

The optional Li-ion battery offers rapid charging in just 2 hours and opportunity charging that eliminates the need to swap batteries at shift changes, all while delivering outstanding performance, lower costs, and no daily maintenance, plus:

- Savings on your energy bills, more uptime, and reduced infrastructure costs
- Fast lifting and travel speeds at all levels of discharge and reduced component wear for longer equipment life

DUAL DRIVE MOTOR & AUTO PARKING SYSTEM

The powerful and efficient dual drive motors deliver superior throughput with faster speeds. The electric disk brakes provide sure stopping power and parking for the truck. The park brake is automatically engaged when the pedal is released, and the brake assembly requires no maintenance. The system is paired with an advanced, high efficiency, virtually noiseless ZAPI controller

ERGONOMICALLY FOCUSED OPERATOR COMPARTMENT

The spacious operator compartment is designed to minimize fatigue and stress on the operator, while maximizing comfort, control, and visibility. To maximize productivity, the cabin includes a joystick lever that requires minimal effort while delivering precise handling. Other features include an adjustable armrest, large backrest, strong overhead guard, and a non-slip floor mat.

SIMPLIFIED MAINTENANCE FOR MORE UPTIME

The BCS-9 has been designed to minimize downtime and make routine servicing fast and easy. Key components have been placed for clear visibility and ready access. A side battery removal assembly allows easy battery replacement when needed. There are remote grease fittings, an accessible top-mounted hydraulic tank filter, and a quick battery disconnector, all to cut servicing time.

The BCS-9 brings you even more advantages.

- Curve Controller System limits travel speed based on the turning radius, reducing speed for a smooth, precise turn
- The controllers are waterproof and sealed from dust to safeguard the machine and reduce possible downtime.
- Optional auto-tilt leveling stops forks at a position parallel to the ground enhancing safety and efficiency when loading and unloading pallets from racks at high elevations
- Excellent gradeability and stability thanks to the powerful dual drive motors
- Anti-rollback system prevents the machine from rolling back after coming to a stop on inclines
- Generous storage space including a cup holder, console box and extra compartment
- For greater convenience, the BCS-9 also features a 12V power socket and a set of accessory switches

ONLY HYUNDAI OFFERS YOU SUCH A COMPREHENSIVE, FULLY INTEGRATED TELEMATICS SYSTEM.

HI-MATE MANAGEMENT SYSTEM

Hi-Mate is one of the industry's most advanced remote management system. With continuous data collection, Hi-Mate delivers more communication, control, and ability to track, monitor, maintain, and manage your forklift fleet. It is the proven way to efficiently coordinate both your equipment and human resources.

Hi-Mate works by collecting key data from sensors mounted to your equipment that track operation of the forklift, relaying that information to your computer or mobile device in real time. By monitoring key components, such as the engine, electric system, and hydraulics, Hi-Mate can help you evaluate machine and operator performance, create preventive maintenance programs, and help you minimize downtime as you maximize productivity.

Equipment operation management

Real-time monitoring and follow-up management of individual pieces of equipment or equipment fleet deliver essential operational status and information, including:

- Key-on time, travel hours, work hours, and GPS location

Equipment status management

Vital diagnostic and maintenance data is relayed as alerts, while Hi-Mate Premium provides tracking of pre-shift checklists to help reduce downtime and ensure OSHA compliance:

- Alerts are sent for DTCs, system warning, and required maintenance

Safe traveling control

An impact monitor provides alerts, accountability, and follow-up management of safety incidents involving equipment during operation:

- The system logs the number and severity of impacts as well as the operator who was logged into the unit at the time of the incident

Human resource management

Hi-Mate Premium can control who operates equipment via a pin pad and RFID reader:

- Provided information can be used to evaluate productivity, efficiency, and workforce safety
- Tracking the weight load indicator captures operator productivity

Data Flow

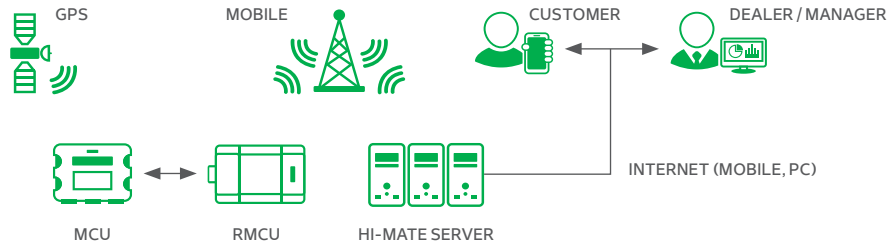

Dimensions

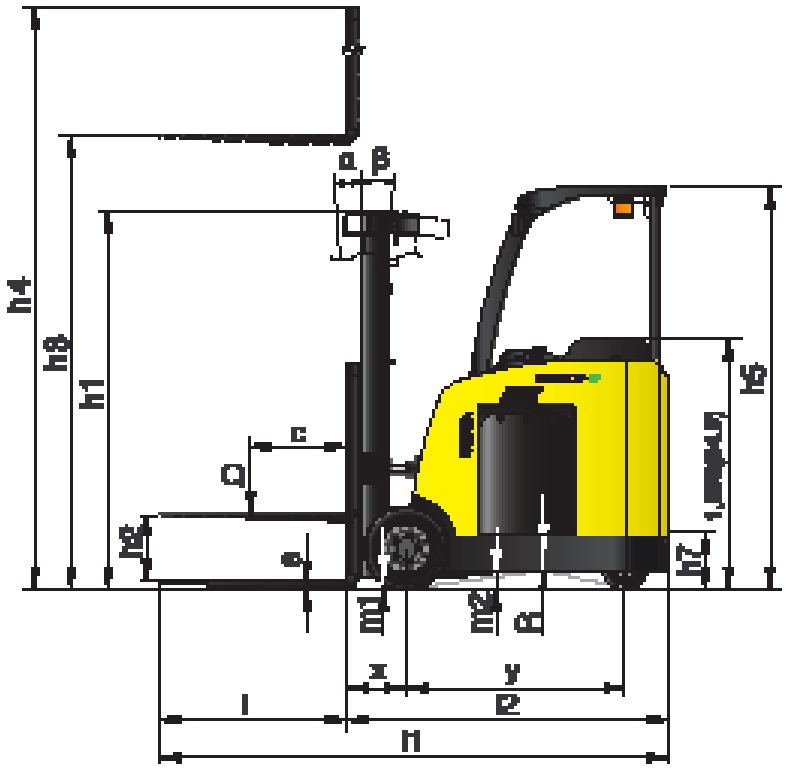

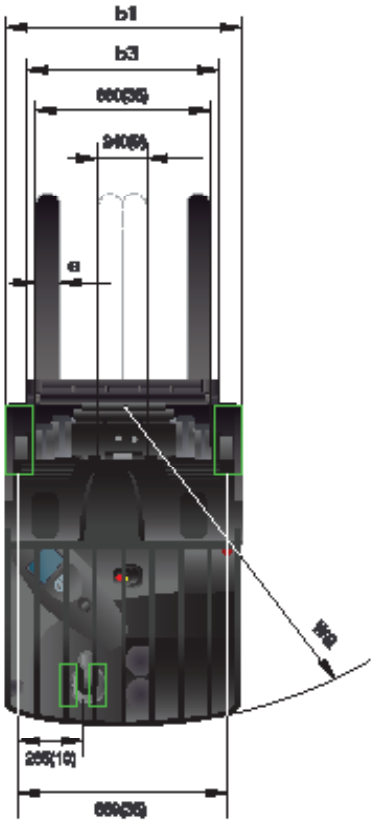

Specifications

Identification						
1.1	Manufacturer			Hyundai		
1.2	Manufacturer's Type Designation			15BCS-9	18BCS-9	20BCS-9
1.3	Drive: Electric (Battery or Mains), Diesel, Petrol, Fuel Gas, Manual			Electric	Electric	Electric
1.4	Type Of Operation : Hand, Pedestrian, Standing, Seated, Order-Picker			Standing	Standing	Standing
1.5	Load Capacity / Rated Load	Q	lb	3,000	3,500	4,000
1.6	Load Center Distance	c	in	24	24	24
1.8	Load Distance, Center of Front Axle to Fork	x	in	12.9	12.9	12.9
1.9	Wheelbase	y	in	45.3	45.3	48.1
Weights						
2.1	Service Weight		lb	8,514	8,922	9,283
2.2	Axle Loading, Loaded Front/Rear		lb	9,792/1,719	10,740/1,686	11,587/1,686
2.3	Axle Loading, Unloaded Front/Rear		lb	4,380/4,133	4,411/4,511	4,554/4,729
Wheels, Chassis						
3.1	Tires: Solid Rubber(V), Superelastic(SE), Pneumatic(P), Polyurethane(PE)			V, PE	V, PE	V, PE
3.2	Tires Size, Front (ø X Width)			18x7x12.12	18x7x12.12	18x7x12.12
3.3	Tires Size, Rear (ø X Width)			10x5x6.5	10x5x6.5	10x5x6.5
3.5	Wheels, Number Front Rear (x=Driven Wheels)			2x/1Dual	2x/1Dual	2x/1Dual
3.6	Track Width, Front	b10	In	35	35	35
3.7	Track Width, Rear	b11	in	7.12	7.12	7.12
Basic Dimensions						
4.1	Mast/Fork Carriage Tilt Forward / Backward		deg	5/5	5/5	5/5
4.2	Lowered Mast Height	h1	In	82.6	82.6	82.6
4.3	Free Lift	h2	In	34.7	34.7	34.7
4.4	Lift Height	h3	In	186.6	186.6	186.6
4.5	Extended Mast Height	h4	In	234.5	234.5	234.5
4.7	Overhead Load Guard (Cab) Height	h5	In	87.9	87.9	87.9
4.8	Seat Height / Standing Height	h7	In	7.8	7.8	7.8
4.19	Overall Length	l1	in	109.3	109.3	112
4.20	Length to Face of Forks	l2	In	67.99	67.99	70.7
4.21	Overall Width	b1	in	42	42	42
4.22	Fork Dimensions	H × W × L	in	1.6 x 3.9 x 41.3	1.6 x 3.9 x 41.3	1.6 x 3.9 x 41.3
4.23	Fork Carriage ISO 2328, Class / Type A,B			II/A	II/A	II/A
4.24	Fork-Carriage Width (with backrest)	b3	in	37.4	37.4	37.4
4.31	Ground Clearance, Under Mast	m1	in	2.4	2.4	2.4
4.32	Ground Clearance, Center of Wheelbase	m2	In	3.9	3.9	3.9
4.33	Aisle Width for Pallets 1000x1200 Crossways	Ast	in	120.3	120.3	123.0
4.34	Aisle Width for Pallets 800x1200 Lengthways	Ast	in	125.1	125.1	127.8
4.35	Turning Radius	Wa	in	55	55	57.7
Performance Data						
5.1	Travel Speed, Loaded / Unloaded		mph	7.5	7.5	7.5
5.2	Lift Speed, Loaded / Unloaded		ft/min	70.9/110.2	66.9/110.2	65/110.2
5.3	Lowering Speed, Loaded /Unloaded		ft/min	94.4/84.6	94.4/84.6	94.4/84.6
5.6	Max. Drawbar Pull, Loaded		lb	2,866	2,866	2,866
5.8	Max. Gradient Performance, Loaded		%	15	15	15
5.10	Service Brake			Electric Release	Electric Release	Electric Release
Engine						
6.1	Dirve Motor Rating S2 60min		hp	5.7	5.7	5.7
6.2	Lift Motor Rating At S3 15%		hp	18.8	18.8	18.8
6.3	Battery Acc. to DIN 43531/35/36 A, B, C, NO			Lead-Acid	Lead-Acid	Lead-Acid
6.4	Battery Voltage, Nominal Capacity K5		V/Ah	36/1,085	36/1,085	36/1,085
6.5	Battery Weight		lb	2,279.6	2,279.6	2,592.6
6.7	Battery Compartment Dimensions	l/w/h	in	38.4/18/31.5	38.4/18/31.5	38.4/18/31.5
Addition Data						
8.1	Type of Drive Control			AC	AC	AC
8.2	Operating Pressure, System / Attachments		psi	2,465/2,030	2,465/2,030	2,465/2,030
8.3	Oil Volume for Attachments		gpm	5.28	5.28	5.28
8.4	Sound Level at the Driver's Ear According to DIN 12053		dB (A)	70	70	70
8.5	Height of Battery Roller		in	7	7	7

15BCS-9

Mast Type		Maximum Fork Height	Overall Height (Lowered)	Free Lift Height		Mast Tilt Angle		Load capacity without Sideshift	Load capacity with Sideshift	Truck Weight (Unloaded)
				With Load Backrest	Without Load Backrest	Fwd	Bwd	24in LC	24in LC	
		in	in	in	in	deg	deg	lb	lb	lb
3 Stage Full Free Lift	TF370	147.2	68.8	20.9	48.9	5	5	3000	3000	8366
	TF400	159.1	72.8	24.8	52.9	5	5	3000	3000	8408
	TF430	170.9	76.7	28.8	56.8	5	5	3000	3000	8450
	TF450	178.7	80.6	32.7	60.7	5	5	3000	3000	8492
	*TF470	186.6	82.6	34.7	62.7	5	5	3000	3000	8514
	TF500	198.4	86.5	38.6	66.7	5	5	3000	2930	8556
	TF550	218.1	94.4	46.5	74.5	5	5	3000	2820	8640
	TF600	237.8	102.3	54.4	82.4	5	5	2600	2420	8774

*Standard

18BCS-9

Mast Type		Maximum Fork Height	Overall Height (Lowered)	Free Lift Height		Mast Tilt Angle		Load capacity without Sideshift	Load capacity with Sideshift	Truck Weight (Unloaded)
				With Load Backrest	Without Load Backrest	Fwd	Bwd	24in LC	24in LC	
		in	in	in	in	deg	deg	lb	lb	lb
3 Stage Full Free Lift	TF370	147.2	68.8	20.9	48.9	5	5	3500	3500	8774
	TF400	159.1	72.8	24.8	52.9	5	5	3500	3480	8816
	TF430	170.9	76.7	28.8	56.8	5	5	3500	3410	8858
	TF450	178.7	80.6	32.7	60.7	5	5	3500	3350	8900
	*TF470	186.6	82.6	34.7	62.7	5	5	3500	3300	8922
	TF500	198.4	86.5	38.6	66.7	5	5	3440	3240	8964
	TF550	218.1	94.4	46.5	74.5	5	5	3300	3130	9048
	TF600	237.8	102.3	54.4	82.4	5	5	2770	2770	9182

*Standard

20BCS-9

Mast Type		Maximum Fork Height	Overall Height (Lowered)	Free Lift Height		Mast Tilt Angle		Load capacity without Sideshift	Load capacity with Sideshift	Truck Weight (Unloaded)
				With Load Backrest	Without Load Backrest	Fwd	Bwd	24in LC	24in LC	
		in	in	in	in	deg	deg	lb	lb	lb
3 Stage Full Free Lift	TF370	147.2	68.8	20.9	48.9	5	5	4000	4000	9136
	TF400	159.1	72.8	24.8	52.9	5	5	4000	3960	9178
	TF430	170.9	76.7	28.8	56.8	5	5	4000	3880	9220
	TF450	178.7	80.6	32.7	60.7	5	5	4000	3830	9261
	*TF470	186.6	82.6	34.7	62.7	5	5	4000	3790	9284
	TF500	198.4	86.5	38.6	66.7	5	5	3920	3725	9325
	TF550	218.1	94.4	46.5	74.5	5	5	3790	3590	9409
	TF600	237.8	102.3	54.4	82.4	5	5	3130	2950	9544

*Standard

Load Capacities

15BCS-9

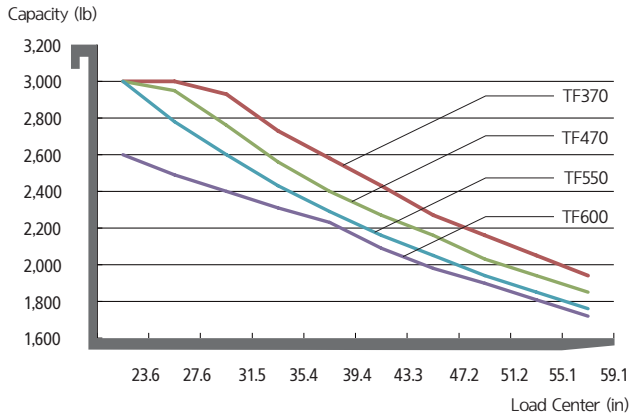

18BCS-9

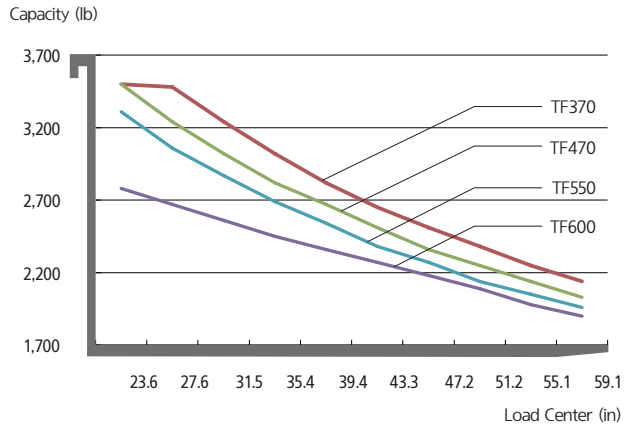

20BCS-9

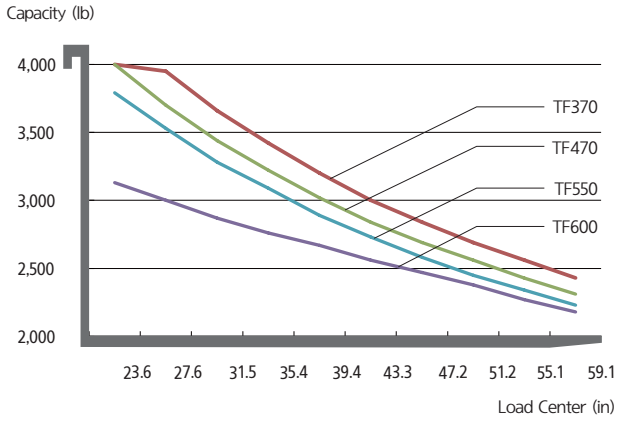

Options

Carriage
- Integral Sideshift - Max 4.7 in

Fork Length (in)
- 35.4
- 37.4
- 39.4
- 41.3 (std)
- 45.3
- 53.2
- 59.1
- 63

Fence
- Wire Net Type (std)
- Temepered Glass Type

Tire
- Vulkollan

Cold Storage for -30° cold working environments

Battery
- 700AH (15/18BCS-9)
- 800AH (20BCS-9)

3-Phase Charger
- 220/380V
- 410V
- 440V

UL
- EE Rating

Beacon Lamp
- Amber
- Blue
- Red

Rear Work Lamp
- Blue Spot

LED Work Lamp

ELEVEX™ Material Handling Solutions

MONTREAL (Head office)
19151 A, Cruickshank Avenue
Baie-D'Urfé (Québec) H9X 3N9

Phone: 418 694-4223
Toll free: 1 866 421-4223
info@elevex.ca

SAGUENAY
2305, Alexis-Le-Trotteur
St. Jonquière (Québec) G7X 9H8

elevex.ca

NO ONE
DELIVERS MORE

HD HYUNDAI XITESOLUTION | MATERIAL HANDLING