25/30/32BC-9U

5,000 / 6,000 / 6,500 lbs capacities

Electric · Cushion Tire

HYUNDAI
MATERIAL HANDLING
NO ONE DELIVERS MORE

ELEVEX™
Material Handling Solutions

MORE INNOVATIONS.
MORE PERFORMANCE.
SO YOU CAN DO MORE AND SAVE MORE.

Get more of what you're looking for: THE BC-9U FROM HYUNDAI

The BC-9U Series offers significant performance improvements that can drive up productivity as it drives down costs. With its advanced controller, energy consumption has been reduced by 16%. Mast working speeds have been increased by 6% so you can move more pallets per hour. Turning radius has been reduced by 4.4 inches. Add in compatibility with Li-ion batteries, outstanding safety features, advanced diagnostics, and simplified maintenance, and you have a forklift engineered to deliver years of service and savings.

So, if you're looking for a forklift that delivers more for less, take a look at the BC-9U.

MULTIFUNCTION CLUSTER OPTIMIZES PERFORMANCE

This advanced digital system clearly displays essential operational information in real time. It also includes buttons for easy setting of travel speed and most operating speeds to match work conditions. You'll find innovations everywhere:

- Onboard diagnostics, data logging, safety features, and maintenance tracking keep operators and technicians informed
- Speed, direction and operating hours are clearly shown
- Load weight indicator with overload warning system

HIGH-PERFORMANCE LITHIUM-ION BATTERY

The optional Li-ion battery offers rapid charging in just 2 hours and opportunity charging that eliminates the need to swap batteries at shift changes, all while delivering outstanding performance, lower costs, and no daily maintenance, plus:

- Savings on your energy bills, more uptime, and reduced infrastructure costs
- Plug-and-play integration delivers charge level and low battery warning alerts directly to the digital cluster

RUGGED, ENERGY-EFFICIENT DEDICATED DRIVE AXLE

The unique design of this dedicated drive axle for the single drive motor offers low resistance and reduced noise generation. The result? Dramatically improved energy efficiency and the lowest level of driving noise in its class for lower operating costs with enhanced operator comfort. It also includes a wet disc brake for reduced maintenance and greater reliability.

ERGONOMICALLY FOCUSED OPERATOR COMPARTMENT

The BC-9U offers operators greater comfort and convenience that translates into greater productivity. There's outstanding visibility, more legroom, and the steering wheel has been reduced by 1.6" to improve handling and reduce fatigue. Options include fingertip controls and a forward/reverse switch and horn button mounted on the lift lever.

SIMPLIFIED MAINTENANCE THAT SAVES TIME & MONEY

The BC-9U includes an array of innovations for faster and easier servicing. The hub and steering wheel design makes it simple to replace the wheel simply by unfastening six nuts. There is ready access to key components, such as the battery and controller. And the Curtis controller features a self-diagnostic function to monitor and check for malfunctions.

FULL SUSPENSION GRAMMER SEAT

Industry-renowned Grammer full suspension seat is adjustable to the operator's body weight, with adjustable armrests and lumbar support to reduce strain on the operator as well as fatigue. Enhanced operator comfort leads to increased efficiency, productivity, and safer operation of the forklift.

The BC-9U Series brings you even more advantages.

- Load weight indicator offers real-time data on the weight of the load and an overload warning through the digital cluster
- The Operator Presence Sensing System (OPSS) prevents driving, lifting, and tilting when the operator leaves the seat
- The optional seatbelt interlock requires the operator to wear the seatbelt for the forklift to operate
- Maximum travel speed can be set to assure greater safety
- With the BC-9U cluster, engine status and issues can be checked without the need for a separate diagnostic tool
- The safety lamp system includes bright, long-life LED work lamps and direction indicators with optional beacon, blue spotlights, and red zone lamps for added safety
- Password setting feature helps to prevent unauthorized use
- Enhanced battery safety with a bottom cover to prevent battery acid leaks from damaging the equipment and an adjustable stopper to secure different size batteries in place
- Curtis Controller with a unique cooling system for greater reliability and power system failure self-diagnostics

ONLY HYUNDAI OFFERS YOU SUCH A COMPREHENSIVE, FULLY INTEGRATED TELEMATICS SYSTEM.

HI-MATE MANAGEMENT SYSTEM

Hi-Mate is one of the industry's most advanced remote management system. With continuous data collection, Hi-Mate delivers more communication, control, and ability to track, monitor, maintain, and manage your forklift fleet. It is the proven way to efficiently coordinate both your equipment and human resources.

Hi-Mate works by collecting key data from sensors mounted to your equipment that track operation of the forklift, relaying that information to your computer or mobile device in real time. By monitoring key components, such as the engine, electric system, and hydraulics, Hi-Mate can help you evaluate machine and operator performance, create preventive maintenance programs, and help you minimize downtime as you maximize productivity.

Equipment operation management

Real-time monitoring and follow-up management of individual pieces of equipment or equipment fleet deliver essential operational status and information, including:

- Key-on time, travel hours, work hours, and GPS location

Equipment status management

Vital diagnostic and maintenance data is relayed as alerts, while Hi-Mate Premium provides tracking of pre-shift checklists to help reduce downtime and ensure OSHA compliance:

- Alerts are sent for DTCs, system warning, and required maintenance

Safe traveling control

An impact monitor provides alerts, accountability, and follow-up management of safety incidents involving equipment during operation:

- The system logs the number and severity of impacts as well as the operator who was logged into the unit at the time of the incident

Human resource management

Hi-Mate Premium can control who operates equipment via a pin pad and RFID reader:

- Provided information can be used to evaluate productivity, efficiency, and workforce safety
- Tracking the weight load indicator captures operator productivity

Data Flow

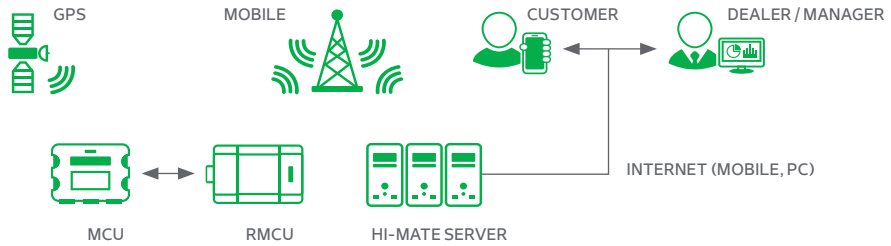

Dimensions

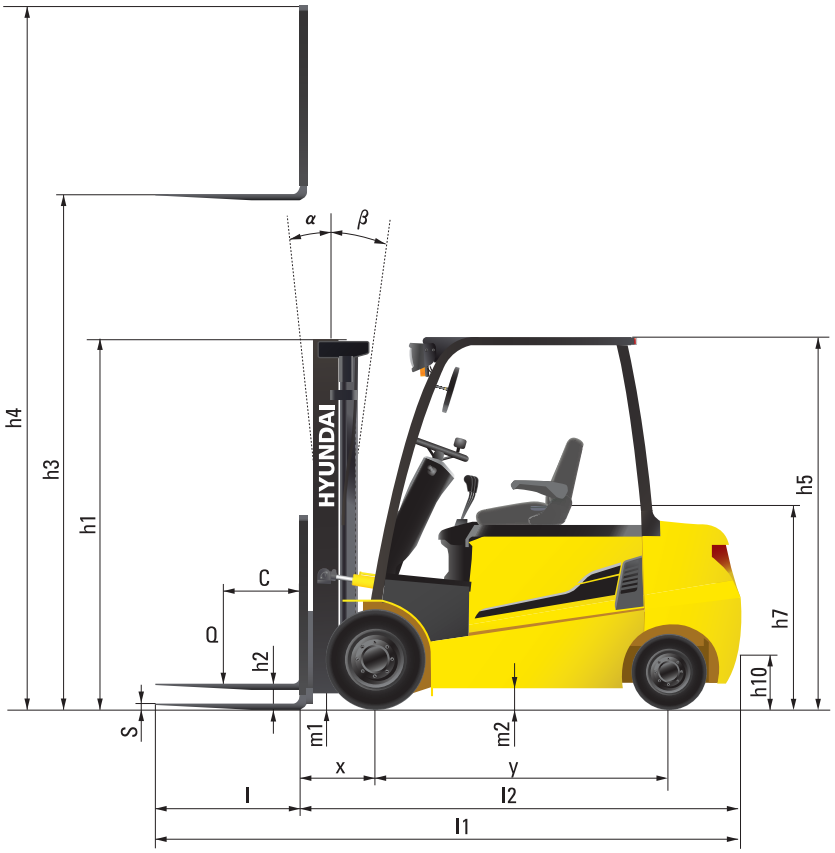

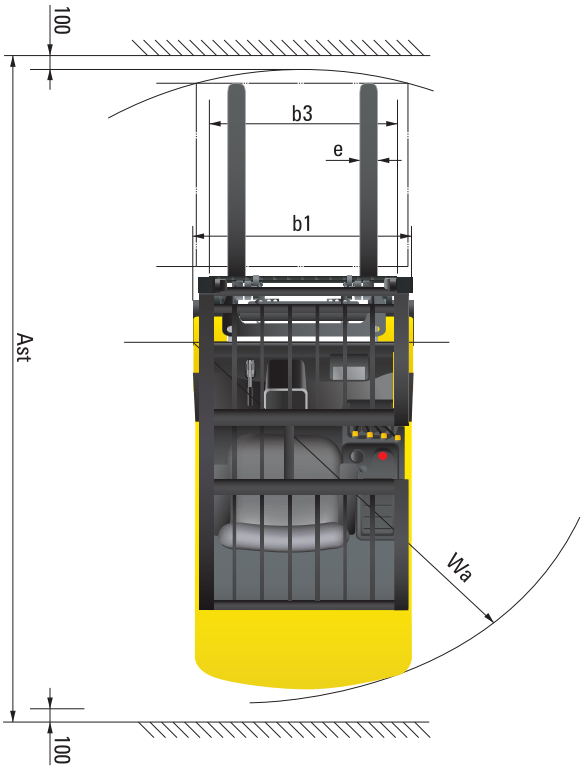

Specifications

Identification						
1.1	Manufacturer			Hyundai		
1.2	Manufacturer's Type Designation			25BC-9U	30BC-9U	32BC-9U
1.3	Drive: Electric (Battery or Mains), Diesel, Petrol, Fuel Gas, Manual			Electric-48V	Electric-48V	Electric-48V
1.4	Type Of Operation : Hand, Pedestrian, Standing, Seated, Order-Picker			Seated	Seated	Seated
1.5	Load Capacity / Rated Load	Q	lb	5,000	6,000	6,500
1.6	Load Center Distance	c	in	24	24	24
1.8	Load Distance, Center of Front Axle to Fork	x	in	18	18	18
1.9	Wheelbase	y	in	52	55	55
Weights						
2.1	Service Weight		lb	9,824	10,913	11,413
2.2	Axle Loading, Loaded Front/Rear		lb	13,457 / 1,878	15,424 / 2,110	16,096 / 15,600
2.3	Axle Loading, Unloaded Front/Rear		lb	3,975 / 5,847	4,284 / 6,636	4,213 / 7,198
Wheels, Chassis						
3.1	Tires: Solid Rubber(V), Superelastic(SE), Pneumatic(P), Polyurethane(PE)			V	V	V
3.2	Tires Size, Front (ø x Width)			21 x 7 x 15	21 x 8 x 15	21 x 8 x 15
3.3	Tires Size, Rear (ø x Width)			16 x 6 x 10.5	16 x 6 x 10.5	16 x 6 x 10.5
3.5	Wheels, Number Front Rear (x=Driven Wheels)			2x/2	2x/2	2x/2
3.6	Track Width, Front	b10	In	36	36	36
3.7	Track Width, Rear	b11	in	36	336	36
Basic Dimensions						
4.1	Mast/Fork Carriage Tilt Forward / Backward		deg	6/8	6/8	6/8
4.2	Lowered Mast Height	h1	In	84	84	84
4.3	Free Lift	h2	In	4.5	4.5	4.5
4.4	Lift Height	h3	In	130	130	130
4.5	Extended Mast Height	h4	In	177	177	177
4.7	Overhead Load Guard (Cab) Height	h5	In	88	88	88
4.8	Seat Height / Standing Height	h7	In	51.2	51.2	51.2
4.12	Coupling Height	h10	In	9	9	9
4.19	Overall Length	l1	in	127	130	131
4.20	Length to Face of Forks	l2	In	85	89	90
4.21	Overall Width	b1	in	44	44	44
4.22	Fork Dimensions	L x E x S	in	1.8 x 3.9 x 41.3	1.8 x 4.8 x 41.3	1.8 x 4.8 x 41.3
4.23	Fork Carriage ISO 2328, Class / Type A,B			II/A	III/A	III/A
4.24	Fork-Carriage Width (with backrest)	b3	in	41	41	41
4.31	Ground Clearance, Under Mast	m1	in	3.5	3.5	3.5
4.32	Ground Clearance, Centre of Wheelbase	m2	In	4.2	4.2	4.2
4.33	Aisle Width for Pallets 1000x1200 Crossways	Ast	in	140	143	144
4.34	Aisle Width for Pallets 800x1200 Lengthways	Ast	in	147	151	152
4.35	Turning Radius	Wa	in	75	78	79
4.36	Smallest Pivot Point Distance	b13	in	22.9	23.3	23.3
Performance Data						
5.1	Travel Speed, Loaded / Unloaded (36v)		mph	6.8 / 7.5	6.8 / 7.5	6.8 / 7.5
5.1	Travel Speed, Loaded / Unloaded (48v)		mph	9.3 / 10.6	9.3 / 10.6	9.3 / 10.6
5.2	Lift Speed, Loaded / Unloaded (36v)		ft/min	60.6 / 90.2	50.2 / 73.8	48.8 / 73.8
5.2	Lift Speed, Loaded / Unloaded(48v)		ft/min	84.6 / 126	70.9 /104.3	70.9 / 104.3
5.3	Lowering Speed, Loaded / Unloaded		ft/min	98.4 / 88.6	98.4 / 88.6	98.4/88.6
5.6	Max. Drawbar Pull, Loaded / Unloaded S2 5min		lbf	3,282 / -	3,254 / -	3,243 / -
5.8	Max. Gradient Performance, Loaded / Unloaded S2 5min		%	18.19.6 / -	17.2 / -	16 / -
5.10	Service Brake			hydr.	hydr.	hydr.
Motor & Battery						
6.1	Drive Motor Rating S2 60min (48v)		kW	10	14	14
6.2	Lift Motor Rating at S3 20%(S2 10min) (48v)		kW	14	16.5	16.5
6.4	Battery Voltage, Nominal Capacity K5 (Option)		V/Ah	48/740	48/845	48/845
6.5	Battery Weight		lb	2,601	3,108	3,108
	Battery Compartment Dimensions	L x W x H	in	39.2 x 30.8 x 23.8	39.2 x 34.8 x 23.8	39.2 x 34.8 x 23.8
6.6	Energy Consumption Acc. To Vdi Cycle		KWh/h	7.3	8.2	8.6
Addition Data						
8.1	Type of Drive Control			AC	AC	AC
8.2	Operating Pressure, System / Attachments		psi	3,045 / 1,885	3,045 / 1,885	3,045 / 1,885
8.3	Oil Volume For Attachments		lpm (gpm)	45 (12)	45 (12)	45 (12)

25BC-9U

Mast Type		Maximum Fork Height	Overall Height (Lowered)	Free Lift Height		Mast Tilt Angle		Load capacity without Sideshift	Load capacity with Sideshift	Truck Weight (Unloaded)
				With Load Backrest	Without Load Backrest	Fwd	Bwd	24in LC	24in LC	
		in	in	in	in	deg	deg	lb	lb	lb
2 Stage Limited Free Li ft	V290	82	60	4.5	4.5	10	6	5,000	5,000	9,620
	V300	118	79	4.5	4.5	6	8	5,000	5,000	9,770
	V330	130	84	4.5	4.5	6	8	5,000	4,960	9,820
	V350	138	88	4.5	4.5	6	8	5,000	4,910	9,870
	V370	146	94	4.5	4.5	6	8	5,000	4,820	9,910
	V400	157	100	4.5	4.5	6	8	5,000	4,710	9,980
	V450	177	112	4.5	4.5	6	5	4,870	4,540	10,240
3 Stage Full Free Lift	TF430	169	78	32	54	6	5	4,890	4,560	10,280
	TF450	177	82	36	58	6	5	4,820	4,490	10,330
	TF470	185	84	38	60	6	5	4,760	4,430	10,360
	TF500	197	88	42	64	6	5	4,650	4,320	10,420
	TF550	217	96	49	72	6	5	4,490	4,180	10,530
	TF600	236	104	57	80	6	5	3,150	2,910	10,720
	TF650	256	112	65	84	3	3	2,550	2,330	10,840
	TF700	276	119	73	91	3	3	2,130	1,940	10,950
4 Stage Full Free Lift	QF610	240	83	37	60	3	3	3,320	3,080	11,230
	QF700	276	95	49	71	3	3	2,570	2,350	11,460

30BC-9U

Mast Type		Maximum Fork Height	Overall Height (Lowered)	Free Lift Height		Mast Tilt Angle		Load capacity without Sideshift	Load capacity with Sideshift	Truck Weight (Unloaded)
				With Load Backrest	Without Load Backrest	Fwd	Bwd	24in LC	24in LC	
		in	in	in	in	deg	deg	lb	lb	lb
2 Stage Limited Free Li ft	V290	82	60	4.5	4.5	10	6	5,000	6,000	10,710
	V300	118	79	4.5	4.5	6	8	5,000	6,000	10,860
	V330	130	84	4.5	4.5	6	8	5,000	5,970	10,910
	V350	138	88	4.5	4.5	6	8	5,000	5,880	10,960
	V370	146	94	4.5	4.5	6	8	5,000	5,820	11,010
	V400	157	100	4.5	4.5	6	8	5,000	5,680	11,080
	V450	177	112	4.5	4.5	6	5	4,870	5,460	11,350
3 Stage Full Free Lift	TF430	169	78	32	52	6	5	4,890	5,480	11,410
	TF450	177	82	36	56	6	5	4,820	5,400	11,440
	TF470	185	84	38	58	6	5	4,760	5,330	10,360
	TF500	197	88	42	62	6	5	4,650	5,240	11,490
	TF550	217	96	49	69	6	5	4,490	5,040	11,600
	TF600	236	104	57	77	6	5	3,150	3,610	11,790
	TF650	256	112	65	81	3	3	2,550	2,930	11,910
	TF700	276	119	73	89	3	3	2,130	2,570	12,030
4 Stage Full Free Lift	QF610	240	83	37	57	3	3	3,320	3,150	12,290
	QF700	276	95	49	69	3	3	2,570	2,420	12,520

32BC-9U

Mast Type		Maximum Fork Height	Overall Height (Lowered)	Free Lift Height		Mast Tilt Angle		Load capacity without Sideshift	Load capacity with Sideshift	Truck Weight (Unloaded)
				With Load Backrest	Without Load Backrest	Fwd	Bwd	24in LC	24in LC	
		in	in	in	in	deg	deg	lb	lb	lb
2 Stage Limited Free Li ft	V300	118	79	4.5	4.5	6	8	6,500	6,500	11,350
	V330	130	84	4.5	4.5	6	8	6,000	5,970	10,910
	V350	138	91	4.5	4.5	6	8	6,500	6,410	11,450
	V370	146	97	4.5	4.5	6	8	6,500	6,340	11,500
	V400	157	103	4.5	4.5	6	8	6,500	6,230	11,570
	V450	177	114	4.5	4.5	6	5	6,450	5,970	11,820
3 Stage Full Free Lift	TF430	169	81	34	52	6	5	6,410	5,950	11,920
	TF450	177	85	38	56	6	5	6,300	5,840	11,970
	TF470	185	87	40	58	6	5	6,230	5,770	12,010
	TF500	197	91	44	62	6	5	6,100	5,660	12,060
	TF550	217	99	52	70	6	5	5,900	5,460	12,080
	TF600	236	106	60	78	6	5	4,270	3,920	12,390
	TF650	256	114	68	86	3	3	3,500	3,190	12,510
	TF700	276	122	76	94	3	3	3,060	2,770	12,630
4 Stage Full Free Lift	QF610	240	85	39	57	3	3	3,790	3,460	12,810
	QF700	276	97	51	69	3	3	2,950	2,680	13,040

Load Capacities

25BC-9U	30BC-9U	32BC-9U

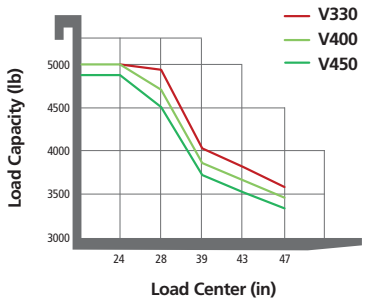

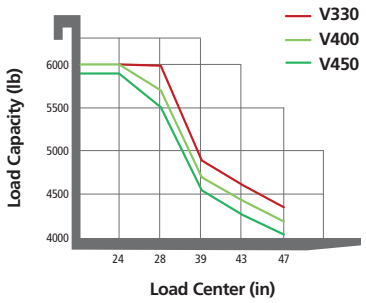

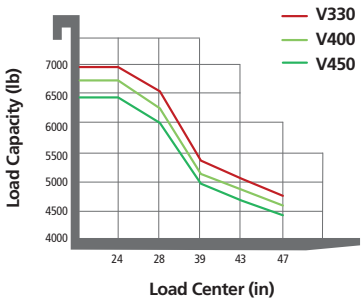

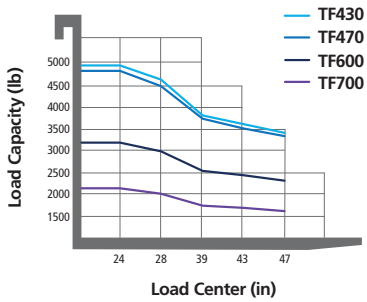

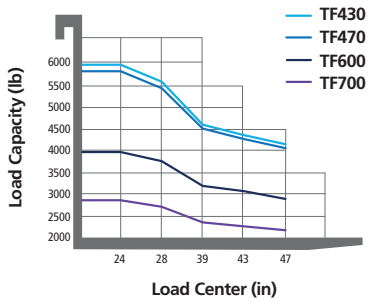

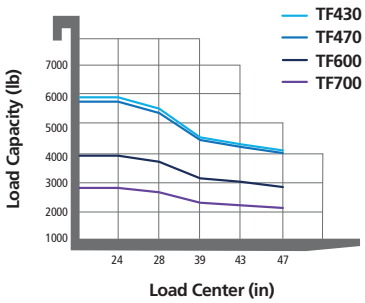

Standards & Options

		Details	25BC-9U	30BC-9U	32BC-9U
OPERATOR'S COMPARTMENT	OHG	Standard Over head guard (Height : 88.2 Inch)	●	●	●
		Low Over Head Guard (Height : 85.2 Inch)	O	O	O
	Seat	Grammer, OPSS, Orange Belt, S/S (Seat Switch), B/S (Buckle Switch), Vinyl	O	O	O
		Grammer, OPSS, Orange Belt, S/S, B/S, Arm Rest, Vinyl	●	●	●
		Grammer, OPSS, Orange Belt, S/S, B/S, Arm Rest(LH), Vinyl	O	O	O
		Non-susp., OPSS, Orange Belt, S/S, B/S, Vinyl	O	O	O
		Seatbelt Interlock	O	O	O
	Other Options	Rear Horn	O	O	O
		Switch Knob with Direction & Horn Switch	O	O	O
MAST	Mast	3 Stage Mast - Single Full Free TF - Standard : 185 Inch	●	●	●
		2 Stage Mast - Standard V - Options : 82/118/130/138/146/157/177 Inch	O	O	O
		3 Stage Mast - Single Full Free TF - Options : 169/177/197/217/236/256/276 Inch	O	O	O
		4 Stage Mast - Single Full Free QF - Options : 240 / 276 Inch	O	O	O
	Fork	Length - 41 Inch	●	●	●
		Length -2.0ton: 35/39/42/47/53/59/65/71/83 Inch -3.0 / 3.2ton: 35/41/45/47/53/59/65/71/78/83 /91 Inch	O	O	O
	Carriage	Standard Hook	●	●	●
		Integral Sideshift	O	O	O
	Tilting	Front 6° / Back 8°	O	O	O
		Front 6° / Back 5°	●	●	●
		Front 3° / Back 3°	O	O	O
		Bottler's Tilt (Front 10°/ Back 6°)	O	O	O
	Attachment	Side Shift	O	O	O
		Side Shift with Fork Positioner	O	O	O
	Others	Auto Tilt	O	O	O
		Manual : Clamp Interlock (3SP / 4SP) Fingertip : Clamp Interlock 4SP Only	O	O	O
		Load Weight Indicator	●	●	●
		Cold Storage	O	O	O
		UL EE	O	O	O

		Details	25BC-9U	30BC-9U	32BC-9U
BATTERY	Battery & Charger	Lead Acid	O	O	O
		Li-Ion (Only available on 25BC-9U)	O	-	-
		36V or 48V	●	●	●
	Frame Type	Standard - Battery Removable In Only An Upward Direction	●	●	●
		Option - Battery Removable In Both Upward & Side Directions	O	O	O
HYDRAULIC	MCV &Piping	3 Spool MCV	●	●	●
		4 Spool MCV	O	O	O
		Mast Option Spool for All MCVs & Masts (V / TF / QF)	O	O	O
	Lever	Lever - General	●	●	●
		Lever - Fingertip	O	O	O
	Hyd. Oil	VG 46 Oil	●	●	●
		VG 68 Oil for Tropical Area	O	O	O
		VG 15 Oil for Cold Area	O	O	O
TIRE	Tires	Cushion Tire (Lug Pattern)	●	●	●
		Cushion Tire (Smooth Pattern)	O	O	O
		Non Marking Tire (Lug Pattern)	O	O	O
		Non Marking Tire (Smooth Pattern)	O	O	O
VISIBILITY	Lamp	Front LED Lamp	●	●	●
		Front & Rear LED Lamp	O	O	O
		Turn signal / Combination lamp	O	O	O
	Safety Special Lamp	LED Beacon Lamp	O	O	O
		Redzone	O	O	O
		Blue Spot (Rear or Front Only)	O	O	O
		Redzone + Blue Spot (Rear)	O	O	O
		Redzone + Blue Spot (Front)	O	O	O
		Blue Spot (Front + Rear)	O	O	O
		Redzone + Blue Spot (Front + Rear)	O	O	O
TELEMATIC SERVICE	Telematics	Hi-Mate Premium	O	O	O

● STD / O OPT

ELEVEX™ Material Handling Solutions

MONTREAL (Head office)
19151 A, Cruickshank Avenue
Baie-D'Urfé (Québec) H9X 3N9

Phone: 418 694-4223
Toll free: 1 866 421-4223
info@elevex.ca

SAGUENAY
2305, Alexis-Le-Trotteur
St. Jonquière (Québec) G7X 9H8

elevex.ca

NO ONE
DELIVERS MORE

HD HYUNDAI XITESOLUTION | MATERIAL HANDLING