Outdoor and Indoor Electric Lift Truck

B-X series

40/45/50/55B-X

ELEVEX™
Material Handling Solutions

HYUNDAI
MATERIAL HANDLING

Next-Generation Electric Power, A New Level of Innovation

THE NEXT GENERATION B-X

Powerful Performance, Electric Innovation

Equipped with high-performance batteries that deliver output equivalent to Internal Combustion Engine (ICE) forklifts, these electric models ensure efficient operation in both indoor and outdoor environments.

Rugged Durability Meets Comfortable Operation

By incorporating core components such as the same cab and tires used in ICE powered forklifts, this series maintains durability while providing a low-noise, low-vibration design for a cleaner and more pleasant working environment — indoors and out.

Fast Charging, High Efficiency

Delivers exceptional work efficiency with up to 14 hours of operation on a single charge.
(*Based on the 93kWh battery option for the 45B-X model.)

Proven Battery Safety and Long-Lasting Durability

Batteries are UL and CE certified to ensure operational safety and are rated IP67 for water resistance, making them suitable for outdoor use under various conditions.

Forklift Technical Service

Feel confident with the Forklift Technical Service from Hyundai Material Handling — Rapid maintenance support from certified Hyundai industrial vehicle engineers along with customised safety training tailored to your needs.

* UL: North American certification (Underwriters Laboratories) CE: European certification (Conformité Européenne)

ENERGY & PERFORMANCE

Experience powerful performance and exceptional productivity with our advanced electric system.

Permanent Magnet Synchronous Motor

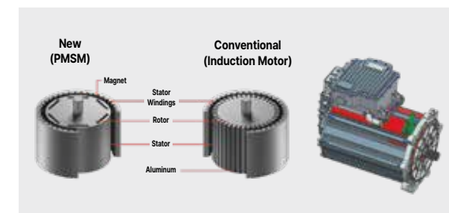

The PMSM incorporates an internal magnet that greatly increases motor efficiency. It's impressive 95% efficiency is achieved by amplifying the magnetic field that generates the electric current. Smaller and lighter weight, the PMSM is used for both the traction and hydraulic motors and uses the same liquid cooling system as the battery, maintaining the optimum temperature in the most rigorous of applications.

(Available in 20/40/120kW options)

Same tires as ICE powered forklifts

Equipped with tire options identical to those on ICE powered models, ensuring smooth and stable performance in outdoor environments.

Performance Equal to ICE Powered Models

Delivers outstanding operational performance in any environment with output equivalent to that of ICE powered forklifts.

Fork lifting / lowering speed

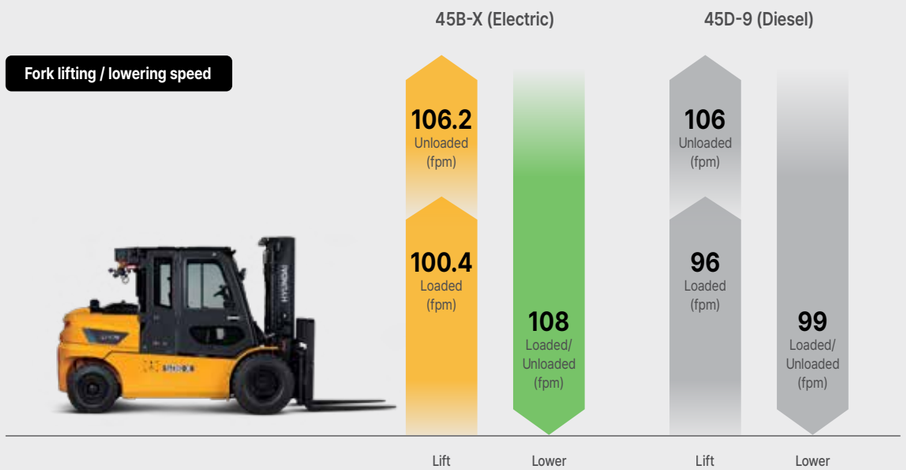

Travel speed

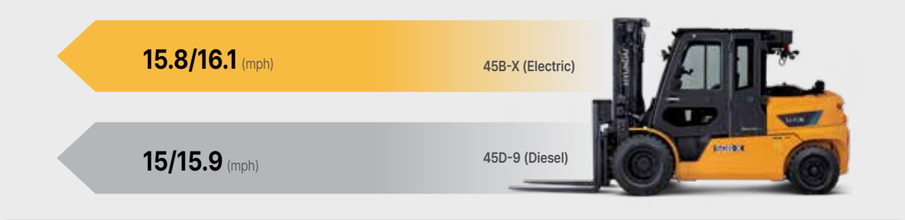

Loaded/Unloaded, mph

Gradeability

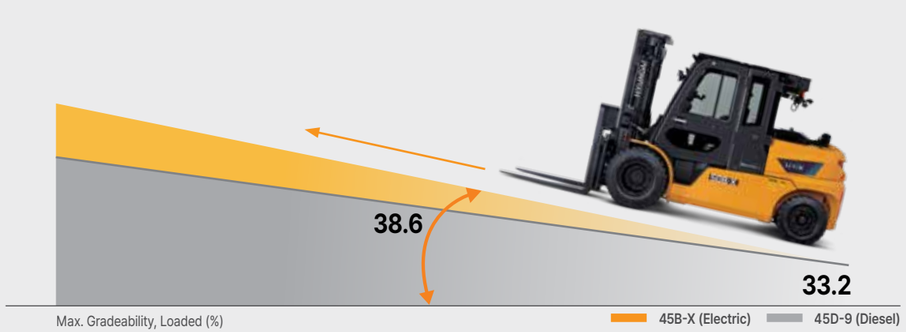

Max. Gradeability, Loaded (%)

Efficient thermal management system

The liquid-cooled cooling system effectively controls heat buildup, allowing the machine to maintain optimal performance even during heavy-duty operation.

Reduced minimum turning radius

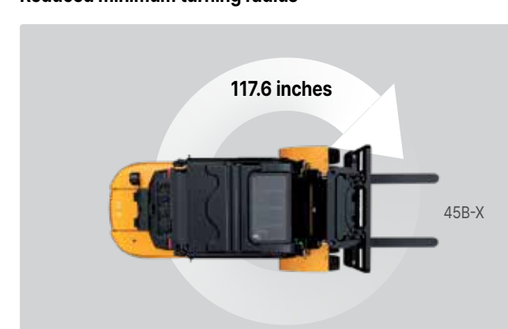

With a turning radius 2.5 in. less than ICE powered models, this forklift allows for agile and efficient operation even in tight spaces. (Based on 45D-9 model)

Fast Charging and up to 14 Hours of Run Time for Enhanced Productivity.

A charging solution that enhances productivity. Up to 14 hours of run time with around 2 hours of charging. This minimizes work interruptions and maximizes field efficiency.

(*Based on 93kWh battery/charger configuration)

Safe charging indoors or outdoors

Thanks to its IP67 and IP69K ratings, the B-X Series can both operate and be charged outdoors in temperatures as low as -40 degrees F. With its IP54-rated water and dust protection, the charger can be installed outdoors and includes safety features to ensure stable charging under all conditions. In addition, the charger can be configured to charge four trucks sequentially.

(Available in 20/40/120kW options)

Standard lithium battery

Comes equipped with high-performance lithium batteries for extended run time and fast charging, improving up-time and efficiency.

Battery heating & cooling system

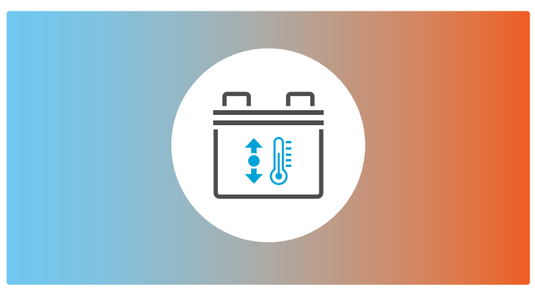

Maintains optimal battery temperature regardless of external conditions, ensuring stable performance even in extremely hot or cold environments.

Battery fire-suppression system

Real-time battery monitoring detects abnormal signals and controls charging/discharging, while activating automatic fire suppression systems as needed to ensure safety.

Charging solution & battery run time information

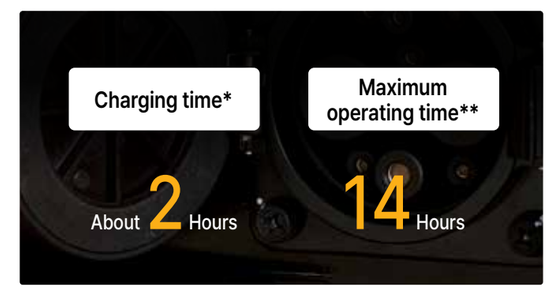

* Based on 93kWh battery option.

** Battery charging time and run time may vary depending on operational conditions.

CONVENIENCE

Work smarter with low noise,
low vibration & high comfort.

LCD cluster display

The high-visibility LCD cluster allows real-time monitoring of the battery status, machine temperature, error/warning messages, and more. It also lets you easily adjust driving modes with safety/convenience features to suit your working environment.

Reduced noise for the operator

Thanks to a low-noise design, cabin noise is reduced by 12dB compared to similar engine models, providing a more pleasant, comfortable and safe working environment.

Constant optimal heating & cooling system

Regardless of motor RPM or coolant temperature, the system delivers maximum heating and cooling performance for all-day comfort.

Dual brake pedals

To accommodate drivers accustomed to engine powered forklifts, dual brake pedals allow for two-foot driving, improving operator convenience and safety.

Various Driver Convenience Features for Easier Operation

Creep mode (Optional)

Smooth low-speed movement without using the accelerator pedal while allowing precise movements

Allows travel at .6 mph without pressing the accelerator

Auto hold / Auto parking

These functions enhance safety by automatically applying the parking brake when the forklift is stationary or the driver dismounts.

Auto hold: Engages the parking brake automatically when brake pedal is held for over 4 seconds
Auto parking: Engages the parking brake when the operator leaves the seat

Anti-rollback

Even on slopes, the system gently controls speed to prevent the forklift from rolling back, helping ensure safe stopping and restarting.

Always park on level ground when using this function for safety.

Drive mode selection

Operators can choose the most suitable driving mode depending on their preferences and working environment.

N (Normal) : Same acceleration feel as ICE forklifts
H (High) : Provides instant acceleration performance for fast task processing
E (Economic) : Smooth acceleration performance with energy efficiency

SAFETY

When it comes to safety, there is no compromise. We use the most advanced technologies to ensure the safest working environment.

Pedestrian detection system (Optional)

A smart safety-assist system designed to prevent accidents between pedestrians and forklifts. When the camera detects a person nearby, the system highlights the surrounding area in yellow on the monitor, providing a clear visual warning to the operator.

Blue spot & Red zone (Optional)

Blue spot projects a blue light in front of the forklift, warning pedestrians ahead of approaching equipment. **Red zone** creates a visual safety boundary around the forklift using red lighting to help prevent accidents and protect everyone in the workplace.

High voltage cable safety design

High-voltage cables are covered in a bright orange material for easy identification.
Thorough insulation and robust protection technology help ensure operational safety.

MAINTENANCE

A design focused on ease of service and low cost maintenance allows for reliable long-term operation.

High-voltage power cut-off switch

To ensure safe maintenance, the forklift includes a Main Service Disconnect (MSD) for isolating the high-voltage system when necessary.

Rear cover

The rear cover features a gas spring design for easy and effortless opening and closing, enhancing user convenience during maintenance.

Sub bonnet

The sub bonnet can be easily opened and closed, making internal inspections and maintenance more convenient.

TCO

Total cost of ownership

Total cost of ownership (TCO) comparison : Next-gen electric model (B-X) vs. ICE powered model (D-9)

Estimated savings at year 10: Approx. $58,000

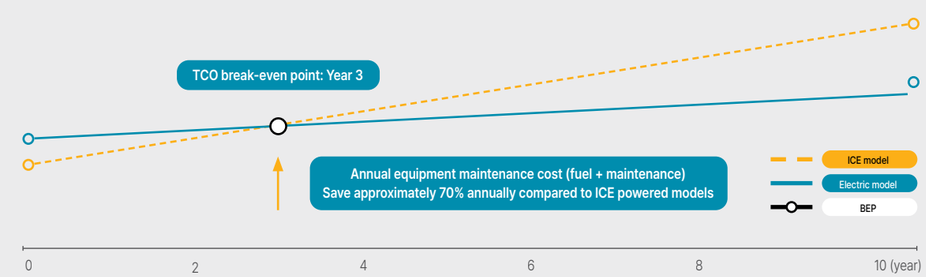

Load sensing system (Optional)

Displays the current load weight in real time on the cluster display. Alerts the operator with a warning alarm when the rated load capacity is exceeded.

Hydraulic accumulator (Optional)

Reduces shock and vibration that may occur while driving with a load, increasing overall work stability and comfort.

12V socket & USB charger

Provides a convenient in-cabin power supply for accessories through a 12V socket and USB charging port.

Charging port protection cover

A protective cover shields the charging port from external impact, dust, and moisture, ensuring safe and long-lasting terminal use.

Maximum travel speed limiter

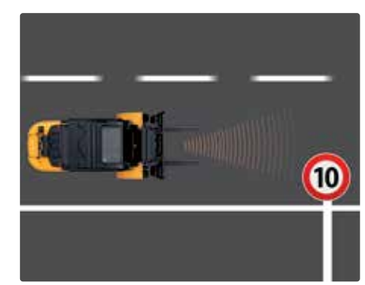

Limits the forklift's maximum speed to comply with site-specific safety regulations and promotes safer operating conditions.

Operator Presence Sensing System

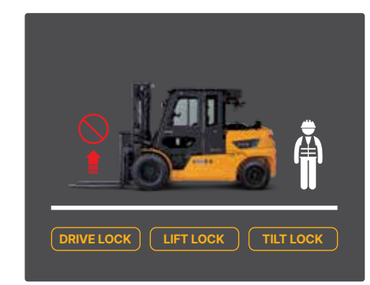

When the operator leaves the seat, the system automatically disables all movement —mast operation and vehicle motion are locked even if controls are engaged.

A Data-driven Solution for Field Management

With the all-new Hi MATE, you can manage forklift fleets at your logistics site.
Visualized data supports the development of management plans for improving safety, boosting productivity, and reducing costs on-site.

Fleet-Level Equipment Operation Management

- Real-time monitoring and post-operation management support by fleet, vehicle, and operator
- Provides operation efficiency, utilization trends, route tracking, fault alerts, and consumable status

Wireless Configuration and Software Update Support

- Remote configuration of key operational features and wireless software update capability

※ Supported models are being expanded

Enhanced Smartphone App

- Fleet and vehicle-level monitoring, remote settings, and work instructions
- Compatible with Galaxy (Android) and iPhone devices

External Communication & Authentication Device Compatibility

- Compatible with third-party communication terminals and operator authentication devices
- Supports basic features such as operation data management

New **B-X Series**

Load Capacity

LOAD CURVE (40B-X)

2-Stage Mast : V300, V400, V500
3-Stage Mast : TF/TS430, TF/TS550, TF/TS650

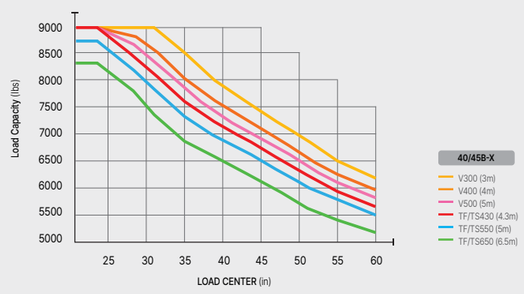

LOAD CURVE (45B-X)

2-Stage Mast : V300, V400, V500
3-Stage Mast : TF/TS430, TF/TS550, TF/TS600

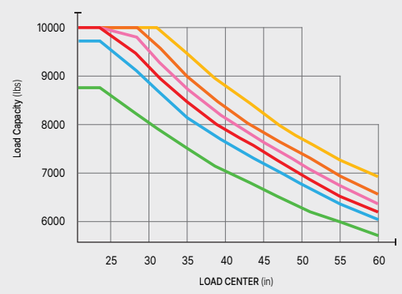

LOAD CURVE (50B-X)

2-Stage Mast : V290, V390
3-Stage Mast : TF/TS420, TF/TS540

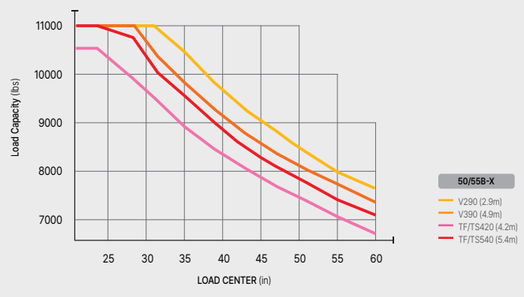

LOAD CURVE (55B-X)

2-Stage Mast : V290, V390
3-Stage Mast : TF/TS420, TF/TS540

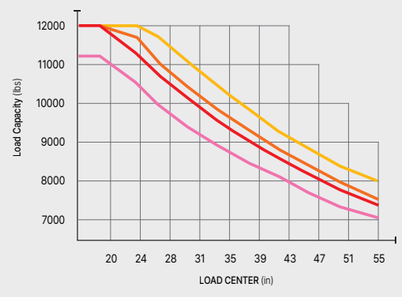

Mast Specifications (40B-X)

Mast Type		Maximum Fork Height	Overall Height (Lowered)		Free Lift Height	Tilt Angle		Load Capacity (without S/S)		Load Capacity (with S/S)		Truck Weight (Unloaded)	
			Single	Double		FWD	RWD	Single	Double	Single	Double	Single	Double
		in	in	in	in	deg	deg	lb	lb	lb	lb	lb	lb
Standard (2-Stage)	V270	107	82	81	5	8	10	9,000	9,000	8,050	8,000	13,889	14,125
	V300	119	88	87	5	8	10	9,000	9,000	8,050	8,000	13,955	14,191
	V330	131	94	93	5	8	10	9,000	9,000	8,050	8,000	14,038	14,274
	V350	139	100	99	5	8	10	9,000	9,000	8,050	8,000	14,089	14,325
	V370	146	104	103	5	8	10	9,000	9,000	8,050	8,000	14,133	14,369
	V400	158	112	111	5	8	10	9,000	9,000	8,050	8,000	14,227	14,463
	V430	170	118	117	5	8	10	9,000	9,000	8,050	8,000	14,293	14,529
	V450	178	122	121	5	8	6	9,000	9,000	8,050	8,000	14,476	14,712
	V500	198	132	131	5	8	6	9,000	9,000	8,050	8,000	14,587	14,824
2-Stage Full Free Lift	VF280	110	84	83	50	8	8	9,000	9,000	8,050	8,000	13,979	14,210
	VF300	118	88	87	53	8	8	9,000	9,000	8,050	8,000	14,037	14,267
	VF315	124	92	91	57	8	8	9,000	9,000	8,050	8,000	14,079	14,310
3-Stage Full Free Lift	TF/TS370	147	80	80	45	8	8	9,000	9,000	8,050	8,000	14,455	14,691
	TF/TS400	159	84	83	49	8	8	9,000	9,000	8,050	8,000	14,521	14,757
	TS420	166	86	85	51	8	8	9,000	9,000	8,050	8,000	14,565	14,801
	TF/TS430	170	88	87	53	8	8	9,000	9,000	8,050	8,000	14,590	14,826
	TF/TS450	178	90	90	55	8	8	9,000	9,000	8,050	8,000	14,631	14,867
	TF/TS470	186	94	93	59	8	8	9,000	9,000	8,050	8,000	14,712	14,948
	TF/TS500	198	98	97	63	8	6	9,000	9,000	8,050	8,000	14,762	14,998
	TF/TS550	217	105	104	70	8	6	8,700	8,750	7,950	7,950	14,897	15,133
	TF/TS600	237	112	111	77	8	6	8,200	8,200	7,450	7,500	15,048	15,284
	TF/TS650	257	119	119	84	8	6	7,900	7,900	7,200	7,200	15,140	15,376

Mast Specifications (45B-X)

Mast Type		Maximum Fork Height	Overall Height (Lowered)		Free Lift Height	Tilt Angle		Load Capacity (without S/S)		Load Capacity (with S/S)		Truck Weight (Unloaded)	
			Single	Double		FWD	RWD	Single	Double	Single	Double	Single	Double
		in	in	in	in	deg	deg	lb	lb	lb	lb	lb	lb
Standard (2-Stage)	V270	107	82	81	5	8	10	10,000	10,000	9,000	9,000	14,921	15,163
	V300	119	88	87	5	8	10	10,000	10,000	9,000	9,000	14,987	15,229
	V330	131	94	93	5	8	10	10,000	10,000	9,000	9,000	15,070	15,312
	V350	139	100	99	5	8	10	10,000	10,000	9,000	9,000	15,121	15,363
	V370	146	104	103	5	8	10	10,000	10,000	9,000	9,000	15,165	15,407
	V400	158	112	111	5	8	10	10,000	10,000	9,000	9,000	15,259	15,501
	V430	170	118	117	5	8	10	10,000	10,000	9,000	9,000	15,325	15,567
	V450	178	122	121	5	8	10	10,000	10,000	9,000	9,000	15,508	15,750
	V500	198	132	131	5	8	10	10,000	10,000	9,000	9,000	15,619	15,862
2-Stage Free Lift Mast	VF280	110	84	83	50	8	10	10,000	10,000	9,050	9,000	15,000	15,242
	VF300	118	88	87	53	8	10	10,000	10,000	9,050	9,000	15,058	15,300
	VF315	124	92	91	57	8	10	10,000	10,000	9,050	9,000	15,100	15,342
3-Stage Full Free Lift	TF/TS370	147	80	80	45	8	8	10,000	10,000	9,050	9,000	15,487	15,735
	TF/TS400	159	84	83	49	8	8	10,000	10,000	9,050	9,000	15,553	15,801
	TS420	166	86	85	51	8	8	10,000	10,000	9,050	9,000	15,598	15,845
	TF/TS430	170	88	87	53	8	8	10,000	10,000	9,050	9,000	15,622	15,870
	TF/TS450	178	90	90	55	8	8	10,000	10,000	9,050	9,000	15,664	15,911
	TF/TS470	186	94	93	59	8	8	10,000	10,000	9,050	9,000	15,744	15,991
	TF/TS500	198	98	97	63	8	6	10,000	10,000	9,050	9,000	15,795	16,042
	TF/TS550	217	105	104	70	8	6	9,700	9,700	8,800	8,850	15,930	16,177
	TF/TS600	237	112	111	77	8	6	9,140	9,150	8,300	8,300	16,080	16,328
	TF/TS650	257	119	119	84	8	6	8,860	8,850	8,050	8,000	16,172	16,420

Mast Specifications (50B-X)

Mast Type		Maximum Fork Height	Overall Height (Lowered)		Free Lift Height	Tilt Angle		Load Capacity (without S/S)		Load Capacity (with S/S)		Truck Weight (Unloaded)	
			Single	Double		FWD	RWD	Single	Double	Single	Double	Single	Double
		in	in	in	in	deg	deg	lb	lb	lb	lb	lb	lb
Standard (2-Stage)	V290	115	87	87	5	8	10	11,000	11,000	10,050	10,000	15,974	16,230
	V320	127	93	93	5	8	10	11,000	11,000	10,050	10,000	16,030	16,285
	V360	143	103	103	5	8	10	11,000	11,000	10,050	10,000	16,121	16,376
	V390	155	111	111	5	8	10	11,000	11,000	10,050	10,000	16,199	16,454
	V440	174	121	121	5	8	10	11,000	11,000	10,050	10,000	16,426	16,682
	V490	194	131	131	5	8	10	11,000	11,000	10,050	10,000	16,519	16,775
3-Stage Full Free Lift	TF360	145	80	80	45	8	10	11,000	11,000	10,050	10,000	16,456	16,685
	TF390	156	84	83	49	8	10	11000	11,000	10,050	10,000	16,514	16,742
	TF/TS420	168	88	87	53	8	10	11,000	11,000	10,050	10,000	16,569	16,797
	TF/TS460	184	94	93	59	8	10	11,000	11,000	10,050	10,000	16,656	16,885
	TF490	195	98	97	63	8	10	10,850	11,000	9,950	10,000	16,712	16,941
	TF/TS540	215	105	104	70	8	10	10,550	10,800	9,650	9,870	16,827	17,055
	TF/TS590	235	112	111	77	8	10	10,300	10,600	9,450	9,650	16,915	17,144
	TS640	255	119	119	84	8	10	10,000	10,300	9,100	9,350	17,007	17,236

Mast Specifications (55B-X, LC 20")

Mast Type		Maximum Fork Height	Overall Height (Lowered)		Free Lift Height	Tilt Angle		Load Capacity (without S/S)		Load Capacity (with S/S)		Truck Weight (Unloaded)	
			Single	Double		FWD	RWD	Single	Double	Single	Double	Single	Double
		in	in	in	in	deg	deg	lb	lb	lb	lb	lb	lb
Standard (2-Stage)	V290	115	87	87	5	8	10	12,000	12,000	11,000	11,000	15,974	16,230
	V320	127	93	93	5	8	10	12,000	12,000	11,000	11,000	16,030	16,285
	V360	143	103	103	5	8	10	12,000	12,000	11,000	11,000	16,121	16,376
	V390	155	111	111	5	8	10	12,000	12,000	11,000	11,000	16,199	16,454
	V440	174	121	121	5	8	10	12,000	12,000	11,000	11,000	16,426	16,682
	V490	194	131	131	5	8	10	11,770	12,000	11,000	10,900	16,519	16,775
3-Stage Full Free Lift	TF360	145	80	80	45	8	10	12,000	12,000	11,000	11,000	16,456	16,685
	TF390	156	84	83	49	8	10	12,000	12,000	11,000	11,000	16,514	16,742
	TF/TS420	168	88	87	53	8	10	12,000	12,000	11,000	11,000	16,569	16,797
	TF/TS460	184	94	93	59	8	10	11,800	12,000	11,000	11,000	16,656	16,885
	TF490	195	98	97	63	8	10	11,600	11,900	10,550	10,800	16,712	16,941
	TF/TS540	215	105	104	70	8	10	11,200	11,500	10,200	10,400	16,827	17,055
	TF/TS590	235	112	111	77	8	10	11,000	11,250	9,950	10,200	16,915	17,144
	TS640	255	119	119	84	8	10	10,600	10,950	9,650	9,900	17,007	17,236

SPECIFICATIONS (40/45/50/55B-X)

Distinguishing marks						
	Manufacturer		Hyundai			
	Manufacturer's model designation		40B-X	45B-X	50B-X	55B-X
1.1	Drive : electric (battery or mains), diesel, gasoline, LPG		Electric	Electric	Electric	Electric
1.2	Type of operation: hand, pedestrian, standing, seated, order-picker		Seated	Seated	Seated	Seated
1.3	Load capacity / Rated load	Q (lb)	9,000	10,000	11,000	12,000
1.4	Load center distance	c (in)	24	24	24	**20**
1.5	Load distance, center of drive axle to fork	x (in)	22.1	22.1	22.1	22.1
1.6	Wheelbase	y (in)	90.0	90.0	90.0	90.0
Weights						
2.1	Service weight	lb	14,356.5	15,207.5	16,133.4	16,133.4
2.2	Axle loading, loaded front/rear	lb	20,648.5 / 2,526.5	22,295.3 / 2,832.9	23,951 / 3,205.5	23,951 / 3,205.5
2.3	Axle loading, unloaded front/rear	lb	7,350.2 / 7,044	7,334.8 / 7,874.9	7,328.2 / 8,807.5	7,334.8 / 7874.9
Tires						
3.1	Tires : solid rubber (V), superelastic (SE), pneumatic (P), polyurethane (PE)		P	P	P	P
3.2	Tire size, front		7.50-16-12PR	7.50-16-12PR	7.50-16-12PR	7.50-16-12PR
3.3	Tire size, rear		7.00-12-14PR	7.00-12-14PR	7.00-12-14PR	7.00-12-14PR
3.5	Wheels, number front / rear (X = driven wheels)		4×2	4×2	4×2	4×2
3.6	Tread, front	b10 (in)	50.5	50.5	50.5	50.5
3.7	Tread, rear	b11 (in)	44.9	44.9	44.9	44.9
General Specifications						
4.1	Tilt of mast/fork carriage forward/backrward	degrees	8/10	8/10	8/10	8/10
4.2	Height, mast lowered	h1 (in)	87.4	87.4	87.4	87.4
4.3	Free lift	h2 (in)	4.7	4.7	4.7	4.7
4.4	Lift height	h3 (in)	118.9	118.9	115.4	115.4
4.5	Height, mast extended	h4 (in)	166.7	166.7	163.3	163.3
4.7	Height of overhead guard (Cabin)	h5 (in)	87.4 / 93.1	87.4 / 93.1	87.8 / 92.9	87.8 / 92.9
4.8	Seat height / Stand height rel. to sip	h7 (in)	51.1	51.1	51.1	51.1
4.12	Coupling height	h10 (in)	14.7	14.2	14.2	14.2
4.19	Overall length	l1 (in)	172.5	178.4	180.6	180.6
4.20	Length to face of forks	l2 (in)	130.4	130.4	133.3	133.3
4.21	Overall width	b1 (in)	55.8 / 68.7	55.8 / 68.7	55.8 / 68.7	55.8 / 68.7
4.22	Fork dimensions	l x e x s (in)	1.9 × 5.9 × 42.0	1.9 × 5.9 × 48	2.3 × 5.9 × 47.2	2.3 × 5.9 × 47.2
4.23	Fork carriage ISO 2328, Class / Type A, B		III / A	III / A	III / A	III / A
4.24	Fork - carriage width	b3 (in)	66	66	68.4	68.4
4.31	Ground clearance, below mast, loaded	m1 (in)	6.1	6.1	6.1	6.1
4.32	Ground clearance, center of wheelbase	m2 (in)	7.5	7.5	7.5	7.5
4.34.1	Aisle width for pallets 1000 X 1200 crossways	Ast (in)	186.9	186.9	190.2	190.2
4.34.2	Aisle width for pallets 800 X 1200 lengthways	Ast (in)	194.8	194.8	198.0	198.0
4.35	Turning radius	Wa (in)	117.6	117.6	120.2	120.2
Performance						
5.1	Travel speed, loaded / unloaded	mph	15.8 / 16.1	15.8 / 16.1	15.8 / 16.1	15.8 / 16.1
5.2	Lift speed, loaded / unloaded	ft/min	100.4 / 106.2	100.4 / 106.2	80.7 / 98.4	80.7 / 98.4
5.3	Lowering speed, loaded / unloaded	ft/min	108 / 108	108 / 108	108 / 108	108 / 108
5.6	Max. drawbar pull, loaded / unloaded	lb	9,285 / 9,107	9,295 /9,090	9,282 / 9,049	9,311 / 9,049
5.8	Max. gradeability, loaded / unloaded	%	42.3 / 23.1	38.6 / 22.0	33.9 /2 0.9	32.6 / 20.9
5.10	Service brake		Hydraulic	Hydraulic	Hydraulic	Hydraulic
Motor/Battery						
6.1	Drive motor rating S2 60min	hp	87.2	87.2	87.2	87.2
6.2	Lift motor rating at S3 15%	hp	44.2	44.2	44.2	44.2
6.3	Battery acc. to Din 43531/35/36 A, B, C,no		LFP	LFP	LFP	LFP
6.4	Battery voltage, nominal capacity K5	V/Ah	309.1 / 173	309.1 / 173	309.1 / 173	309.1 / 173
6.5	Battery weight	lb	1574.1	1574.1	1574.1	1574.1
Other						
8.1	Type of drive control	AC	AC	AC	AC	AC
8.2	Operating pressure for attachments	psi	3,118 / 2,030	3,118 / 2,030	3,118 / 2,030	3,118 / 2,030
8.3	Oil volume for attachments	GPM-US	16	16	16	16
8.4	Sound Level at the driver's ear According to din 12053	dB (A)	74.5	74.5	74.5	74.5

STANDARD/OPTIONAL FEATURES

		Item	40B-X	45B-X	50/55B-X
Battery & Charger	Battery	53kWh - 309V/173Ah	●	●	●
		70kWh - 348V/200Ah	○	○	○
		93kWh - 348V/268Ah	○	○	○
	Charger	20kW (3P 380~480V)	●	●	●
		40kW, 120kW (3P 380~480V)	○	○	○
		20kW (3P 220~480V)			
	Charger Accessories	Portable charger (3.5kW, 1P 110/220V)	○	○	○
		Multi charger	○	○	○
OHG	OHG	OHG	●	●	●
		High OHG (92.6in)	○	○	○
	Cabin	Cabin (1-door, 2-door, W/O Side door)	○	○	○
Cabin	A/C	A/C + Heater	○	○	○
	Seat	Grammer seat (Seatbelt, buckle switch)	●	●	●
		Seat options (Fabric seat, armrest, heat, backrest)	○	○	○
	Other options	Radio + USB + Bluetooth	○	○	○
		Fire extinguisher	○	○	○
Mast & Attachment	Mast	Standard 2-stage mast	● (185in)	● (185in)	● (181in)
		Optional 2-stage mast (V)	○	○	○
		Optional 3-stage mast (TF/TS)	○	○	○
	Fork	Standard fork	● (48in)	● (48in)	● (47in)
		Fork length options (42~94in)	○	○	○
	Tilt	8°(F)/8°(R)	●	●	●
		8°(F)/10°(R), 8°(F)/6°(R)	○	○	○
	Carriage	Integral shaft carriage	○	○	○
		Hook type carriage	●	●	●
		Wide carriage	○	○	○
		Narrow carriage	●	●	●
	Attachment	Side shift	○	○	○
		Side shift & fork positioner	○	○	○

		Item	40B-X	45B-X	50/55B-X
Hydraulics	Lever	Manual lever	●	●	●
		Fingertip lever	○	○	○
	MCV	MCV 4 spool	●	●	●
		MCV 3, 5 spool	○	○	○
		Attachment piping (3, 4, 5 spool)	○	○	○
Tires	Tires	Pneumatic	○	○	○
		Solid	●	●	●
		Non marking	○	○	○
		Front pneumatic + Rear solid, Front solid + Rear pneumatic	○	○	○
		Single/Double, Front double + Rear Double Coin	○	○	○
Visibility	Lights	Front/Rear LED work lights	●	●	●
	Mirrors	L/H & R/H side, parnoramic	●	●	●
Convenience	Convenience	Load sensor	●	●	●
		Accumulator	○	○	○
		Auto tilt	○	○	○
		F/R Switch-knob	○	○	○
Safety	Safety	OPSS (Operator Presence Sensing System)	●	●	●
		Seatbelt Interlock	○	○	○
		Master switch (Battery cut-off)	○	○	○
		Hi Mate (Basic/Premium)	○	○	○
		Travel speed limit	○	○	○
		LED beacon	●	●	●
		Red zone/Blue spot	○	○	○
	Camera	Rear camera	○	○	○
		PDS (Pedestrian Detection Alarm)	○	○	○
Other	Other	VG46	●	●	●
		Optional oil - VG68 (Tropical), VG15 (Freezer)	○	○	○
		Under cover	○	○	○
		Side cover - plastic/steel	○	○	○

● STD / ○ OPT

DIMENSIONS

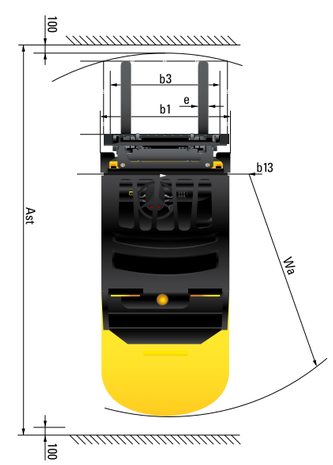

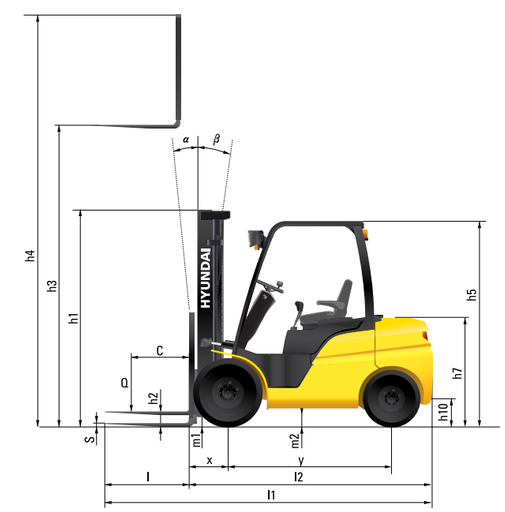

ELEVEX™
Material Handling Solutions

MONTREAL (Head office)
19151 A, Cruickshank Avenue
Baie-D'Urfé (Québec) H9X 3N9

Phone: 418 694-4223
Toll free: 1 866 421-4223
info@elevex.ca

SAGUENAY
2305, Alexis-Le-Trotteur
St. Jonquière (Québec) G7X 9H8

elevex.ca

NO ONE
DELIVERS MORE

HD HYUNDAI XITESOLUTION | MATERIAL HANDLING

2025. 07