40/45/50B-9

8,000 / 9,000 / 10,000 lbs capacities

Electric · Pneumatic Tire

HYUNDAI
MATERIAL HANDLING
NO ONE DELIVERS MORE

ELEVEX™
Material Handling Solutions

MORE VERSATILITY.
MORE RELIABILITY.
MORE OF WHAT YOU NEED TO GET THE JOB DONE RIGHT.

Get more of what you're looking for:
THE B-9 FROM HYUNDAI

The Hyundai B-9 Series of electric forklifts has been designed to increase your productivity and your operation's profitability through a combination of innovative features, greater operator comfort, simplified maintenance, durable construction, and enhanced reliability. With its powerful dual drive motor and outstanding gradeability, it offers an environmentally friendly alternative to IC-powered forklifts and can tackle your toughest jobs indoors and out.

But that's only the beginning of all that a B-9 offers. Just consider some of the key features and benefits you'll find, and you'll understand why we say that **No One Delivers More** than Hyundai.

MULTIFUNCTION CLUSTER OPTIMIZES PERFORMANCE

This advanced digital system displays essential operational information in real time. It also includes buttons for easy setting of travel speed and most operating speeds to match work conditions. You'll find innovations everywhere

- Onboard diagnostics, data logging, safety features, and maintenance tracking keep operators and technicians fully informed
- Speed, direction and operating hours are clearly shown
- Load weight indicator with overload warning system

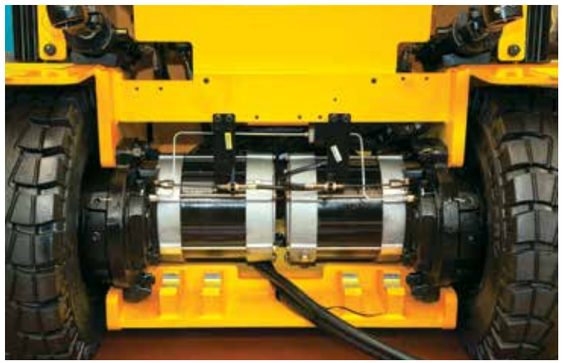

POWERFUL, LOW MAINTENANCE DUAL DRIVE MOTOR

The reliable AC system delivers optimum performance in all kinds of environments, over uneven and wet pavements, as well as an outstanding gradeability range from 22-25% with a max speed of 10.6 MPH. Other features include:

- Curve control that limits travel speed giving the operators greater confidence navigating the workplace
- Optional auto fork leveling to protect loads
- Optimized lift cylinder arrangement for greater visibility
- Enhanced brake oil reservoir with an electronic level sensor

SPACIOUS OPERATOR COMPARTMENT

The roomy, comfortable operator's compartment is designed for more precise handing and reduced operator fatigue. It includes a standard Grammer™ full suspension seat that adjusts to the operator's body weight and adjustable armrests and lumbar support. There is also a fully adjustable steering wheel, optimized pedal position, and large entrance step.

EASY BATTERY REPLACEMENT

The B-9 Series is engineered to reduce downtime and simplify maintenance. Battery replacement is quick and easy through the side of the forklift without the need for expensive equipment like a crane. There is also easy access to key components. For example, no tools are required to access the AC controller which is conveniently located for any required servicing.

HIGH PERFORMANCE LI-ION BATTERY

The optional Li-ion battery features rapid charging in just 2 hours and delivers outstanding performance with a low cost of ownership. It requires no daily maintenance and eliminates the need to swap batteries at shift changes. It offers up to 15% savings on electric bills, while delivering fast lift and travel speeds. All without the harmful emissions of lead acid batteries.

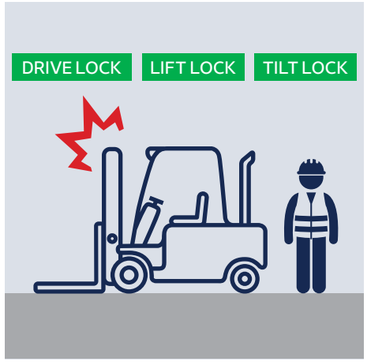

OPERATOR PRESENCE SAFETY SYSTEM (OPSS)

The OPSS requires operators to be present, in their seats, to have use of the travel and lifting and tilting functions. Together, with its outstanding visibility, curve control and hill assist control, the B-9 Series offers a comprehensive safety package to protect operators, employees working around your forklifts, the machine itself, your inventory and facility.

The B -9 Series brings you even more advantages.

- Optional hill assist control to prevent the machine from rolling back after coming to a stop on inclines or declines
- Strong overhead guard exceeds CEE and ANSI regulations
- Outstanding lighting package includes LED combination lights and halogen headlines
- Fork safety features, including a down-control valve that maintains a controlled lowering speed and a down-safety valve that prevents forks from suddenly dropping if the hydraulic line is damaged
- Panoramic mirror that expands the driver's view during operation
- Performance modes set on the cluster, including High, Normal, Economic, and Turtle modes
- Full compatibility with Hyundai's exclusive Hi-Mate remote management system

ONLY HYUNDAI OFFERS YOU SUCH A COMPREHENSIVE, FULLY INTEGRATED TELEMATICS SYSTEM.

HiMATE

HI-MATE MANAGEMENT SYSTEM

Hi-Mate is one of the industry's most advanced remote management system. With continuous data collection, Hi-Mate delivers more communication, control, and ability to track, monitor, maintain, and manage your forklift fleet. It is the proven way to efficiently coordinate both your equipment and human resources.

Hi-Mate works by collecting key data from sensors mounted to your equipment that track operation of the forklift, relaying that information to your computer or mobile device in real time. By monitoring key components, such as the engine, electric system, and hydraulics, Hi-Mate can help you evaluate machine and operator performance, create preventive maintenance programs, and help you minimize downtime as you maximize productivity.

Equipment operation management

Real-time monitoring and follow-up management of individual pieces of equipment or equipment fleet deliver essential operational status and information, including:

- Key-on time, travel hours, work hours, and GPS location

Equipment status management

Vital diagnostic and maintenance data is relayed as alerts, while Hi-Mate Premium provides tracking of pre-shift checklists to help reduce downtime and ensure OSHA compliance:

- Alerts are sent for DTCs, system warning, and required maintenance

Safe traveling control

An impact monitor provides alerts, accountability, and follow-up management of safety incidents involving equipment during operation:

- The system logs the number and severity of impacts as well as the operator who was logged into the unit at the time of the incident

Human resource management

Hi-Mate Premium can control who operates equipment via a pin pad and RFID reader:

- Provided information can be used to evaluate productivity, efficiency, and workforce safety
- Tracking the weight load indicator captures operator productivity

Data Flow

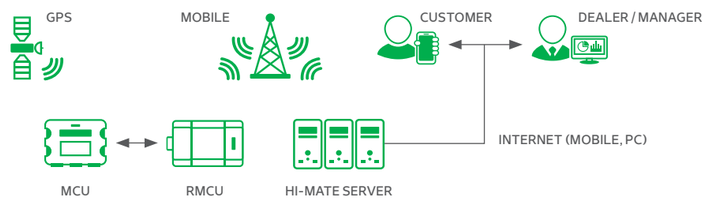

Dimensions

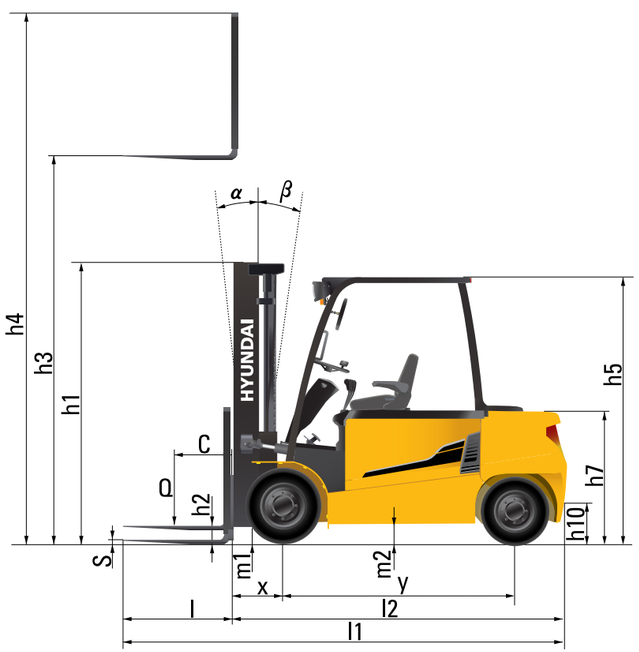

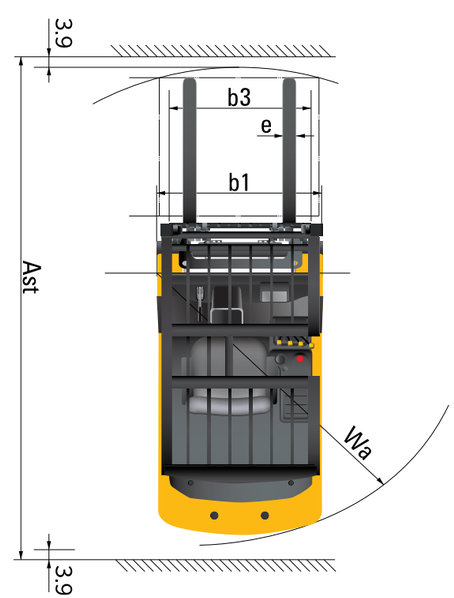

Specifications

Identification						
1.1	Manufacturer			Hyundai		
1.2	Manufacturer's Type Designation			40B-9	45B-9	50B-9
1.3	Drive: Electric (Battery or Mains), Diesel, Petrol, Fuel Gas, Manual			Electric	Electric	Electric
1.4	Type of Operation : Hand, Pedestrian, Standing, Seated, Order-Picker			Seated	Seated	Seated
1.5	Load Capacity / Rated Load	Q	lb	9,000	10,000	11,000
1.6	Load Center Distance	c	in	19.68	19.68	19.68
1.8	Load Distance, Center of Front Axle to Fork	x	in	24	24	24
1.9	Wheelbase	y	in	79.72	79.72	79.72
Weights						
2.1	Service Weight		lb	15,112.69	16,192.95	17,207.08
2.2	Axle Loading, Loaded Front/Rear		lb	21,049.74 / 2,881.44	23,051.53 / 3,062.22	24,982.78 / 3,225.36
2.3	Axle Loading, Unloaded Front/Rear		lb	7,725 / 7,387.69	8,060.1 / 8,132.85	8,331.26 / 8,875.81
Wheels, Chassis						
3.1	Tires: Solid Rubber(V), Superelastic(SE), Pneumatic(P), Polyurethane(PE)			SE, P	SE, P	SE, P
3.2	Tires Size, Front (ø x Width)			250-15	250-15	28×12.5-15
3.3	Tires Size, Rear (ø x Width)			23×9-10	23×9-10	23×9-10
3.5	Wheels, Number Front Rear (x=Driven Wheels)			2×/2	2×/2	2×/2
3.6	Track Width, Front	b10	In	44.9	44.9	44.9
3.7	Track Width, Rear	b11	in	43.2	43.2	43.86
Basic Dimensions						
4.1	Mast/Fork Carriage Tilt Forward / Backward		deg	6/10	6/10	6/10
4.2	Lowered Mast Height	h1	In	87.6	87.6	87.6
4.3	Free Lift	h2	In	4.72	4.72	4.72
4.4	Lift Height	h3	In	118.89	118.89	114.96
4.5	Extended Mast Height	h4	In	166.29	166.29	162.8
4.7	Overhead Load Guard (Cab) Height	h5	In	91.33	91.33	91.33
4.8	Seat Height / Standing Height	h7	In	50.6	50.6	50.5
4.12	Coupling Height	h10	In	18.11	18.11	18.11
4.19	Overall Length	l1	in	165.94	165.94	167.72
4.20	Length to Face of Forks	l2	In	117.91	117.91	119.7
4.21	Overall Width	b1	in	54.17	54.17	56
4.22	Fork Dimensions	L x W x H	in	42 × 5 × 2	42 × 5 × 2	42 × 6 × 2
4.23	Fork Carriage ISO 2328, Class / Type A,B			III /A	III /A	III /A
4.24	Fork-Carriage Width	b3	in	54.17	54.17	54.17
4.31	Ground Clearance, Loaded, Under Mast	m1	in	6.29	6.29	6.49
4.32	Ground Clearance, Center of Wheelbase	m2	In	5.9	5.9	6.1
4.33	Aisle Width for Pallets 1000x1200 Crossways	Ast	in	173.42	173.42	175
4.34	Aisle Width for Pallets 800x1200 Lengthways	Ast	in	181.29	181.29	183
4.35	Turning Radius	Wa	in	105.11	105.11	106.5
Performance Data						
5.1	Travel Speed, Loaded / Unloaded (80v)		mph	11.2 / 11.2	11.2 / 11.2	11.2 / 11.2
5.2	Lift Speed, Loaded / Unloaded (80v)		fpm	70.9 / 102.4	65 / 98.4	63 / 88.6
5.3	Lowering Speed, Loaded / Unloaded		fpm	99 / 89	99 / 89	99 / 83
5.6	Max. Drawbar Pull, Loaded / Unloaded		fpm	6,336 / 6,535	6,443 / 6,520	6,420 / 6,400
5.8	Max. Gradient Performance, Loaded / Unloaded		%	23 / 25	21 / 23	19 / 22
5.10	Service Brake			Hydraulic	Hydraulic	Hydraulic
Motor & Battery						
6.1	Drive Motor Rating S2 60min (48v)		hp	13.4 x 2	13.4 x 2	13.4 × 2
6.2	Lift Motor Rating at S3 20%(S2 10min) (48v)		hp	37.5	37.5	37.5
6.4	Battery Voltage, Nominal Capacity K5 (Option)		Ah	80 / 700	80 / 700	80 / 700
6.5	Battery Compartment	L x W x H	in	40.7 x 39.5 x 30.9	40.7 x 39.5 x 30.9	40.7 x 39.5 x 30.9
6.6	Battery Weight		lb	4,618-5,368	4,618-5,368	4,618-5,368
Additional Data						
8.1	Type of Drive Control			AC	AC	AC

* All specifications in this catalog are subject to change according to the optional items.

40B-9

Mast Type		Maximum Fork Height	Overall Height (Lowered)	Free Lift Height		Mast Tilt Angle		Load capacity without Sideshift		Load capacity with Sideshift		Truck Weight (Unloaded)	
				With Load Backrest	Without Load Backrest	Fwd	Bwd	Single Tire	Dual tire	Single Tire	Dual Tire	Single Tire	Dual Tire
		in	in	in	in	deg	deg	lb	lb	lb	lb	lb	lb
2 Stage Limited Free Lift	V270	107.08	81.69	4.72	4.72	6	10	8,818.49	8,818.49	8,818.49	8,818.49	15,064.19	15,655.03
	V300	118.89	87.59	4.72	4.72	6	10	8,818.49	8,818.49	8,818.49	8,818.49	15,112.69	15,710.14
	V330	130.70	93.50	4.72	4.72	6	10	8,818.49	8,818.49	8,818.49	8,818.49	15,176.62	15,767.46
	V350	138.58	99.40	4.72	4.72	6	10	8,818.49	8,818.49	8,818.49	8,818.49	15,229.53	15,857.85
	V370	146.45	103.34	4.72	4.72	6	10	8,818.49	8,818.49	8,708.25	8,818.49	15,267.01	15,935.01
	V400	158.26	111.61	4.72	4.72	6	10	8,818.49	8,818.49	8,598.02	8,598.02	15,344.17	15,769.67
	V450	177.95	121.45	4.72	4.72	6	6	8,818.49	8,818.49	8,046.87	8,267.33	15,436.77	16,027.61
	V500	197.63	131.29	4.72	4.72	6	6	8,818.49	8,818.49	7,826.41	8,157.1	15,531.57	16,120.2
3 Stage Full Free Lift	TF370	146.85	79.72	44.84	31.96	6	6	8,818.49	8,818.49	8,267.33	8,377.56	15,727.78	16,292.16
	TF400	158.66	83.66	48.77	35.90	6	6	8,818.49	8,818.49	8,157.1	8,377.56	15,785.1	16,349.48
	TF430	170.47	87.59	52.71	39.84	6	6	8,818.49	8,818.49	8,046.87	8,267.33	15,840.21	16,404.6
	TF450	177.55	89.96	55.07	42.20	6	6	8,818.49	8,818.49	7,936.64	8,046.87	15,875.49	16,439.87
	TF470	185.82	93.50	58.62	45.74	6	6	8,708.25	8,818.49	7,716.17	7,936.64	15,926.19	16,490.58
	TF500	197.63	97.44	62.55	49.68	6	6	8,598.02	8,598.02	7,716.17	7,826.41	15,983.51	16,547.9
	TF550	217.32	104.52	69.64	56.77	6	6	8,267.33	8,377.56	7,495.71	7,605.94	16,095.95	16,660.33
	TF600	237.40	111.61	76.73	63.85	6	6	8,046.87	8,046.87	7,275.25	7,275.25	15,963.67	16,746.31

* TF-Mast : Wide Visible 3-Stage Full Free Lift Mast with 1 Free Lift Cylinders.

*Standard

45B-9

Mast Type		Maximum Fork Height	Overall Height (Lowered)	Free Lift Height		Mast Tilt Angle		Load capacity without Sideshift		Load capacity with Sideshift		Truck Weight (Unloaded)	
				With Load Backrest	Without Load Backrest	Fwd	Bwd	Single Tire	Dual tire	Single Tire	Dual Tire	Single Tire	Dual Tire
		in	in	in	in	deg	deg	lb	lb	lb	lb	lb	lb
2 Stage Limited Free Lift	V270	107.08	81.69	4.72	4.72	6	10	9,920.8	9,920.8	9,920.8	9,920.8	16,135.63	16,609.63
	V300	118.89	87.59	4.72	4.72	6	10	9,920.8	9,920.8	9,920.8	9,920.8	16,212.79	16,666.95
	V330	130.70	93.50	4.72	4.72	6	10	9,920.8	9,920.8	9,920.8	9,920.8	16,248.07	16,724.27
	V350	138.58	99.40	4.72	4.72	6	10	9,920.8	9,920.8	9,920.8	9,920.8	16,303.18	16,777.18
	V370	146.45	103.34	4.72	4.72	6	10	9,920.8	9,920.8	9,700.34	9,810.57	16,338.46	16,814.66
	V400	158.26	1116.45	4.72	4.72	6	10	9,920.8	9,920.8	9,479.87	9,590.10	16,417.82	16,891.82
	V450	177.95	121.45	4.72	4.72	6	6	9,920.8	9,920.8	9,149.18	9,259.41	16,510.42	16,984.41
	V500	197.63	131.29	4.72	4.72	6	6	9,920.8	9,920.8	9,038.95	9,149.18	16,603.01	17,081.42
3 Stage Full Free Lift	TF370	146.85	79.72	44.84	31.96	6	6	9,920.8	9,920.8	9,259.41	9,369.64	16,618.45	17,182.83
	TF400	158.66	83.66	48.77	35.90	6	6	9,920.8	9,920.8	9,149.18	9,259.41	16,675.77	17,240.15
	TF430	170.47	87.59	52.71	39.84	6	6	9,920.8	9,920.8	9,038.95	9,149.18	16,733.09	17,297.47
	TF450	177.55	89.96	55.07	42.20	6	6	9,810.57	9,810.57	8,928.72	8,928.72	16,766.16	17,330.54
	TF470	185.82	93.503	58.62	45.74	6	6	9,700.34	9,700.34	8,818.49	8,818.49	16,819.07	17,383.45
	TF500	197.63	97.44	62.55	49.68	6	6	9,479.87	9,590.10	8,598.02	8,598.02	16,876.39	17,440.77
	TF550	217.32	104.52	69.64	56.77	6	6	9,259.41	9,259.41	8,377.56	8,487.79	16,991.03	17,555.41
	TF600	237.40	111.61	76.73	63.85	6	6	8,928.72	8,928.72	8,046.87	8,157.10	17,077.01	17,641.39

* TF-Mast : Wide Visible 3-Stage Full Free Lift Mast with 1 Free Lift Cylinders.

*Standard

50B-9

Mast Type		Maximum Fork Height	Overall Height (Lowered)	Free Lift Height		Mast Tilt Angle		Load capacity without Sideshift		Load capacity with Sideshift		Truck Weight (Unloaded)	
				With Load Backrest	Without Load Backrest	Fwd	Bwd	Single Tire	Dual tire	Single Tire	Dual Tire	Single Tire	Dual Tire
		in	in	in	in	deg	deg	lb	lb	lb	lb	lb	lb
2 Stage Limited Free Lift	V260	103.14	81.88	4.72	4.72	6	10	11,001.07	11,001.07	11,001.07	11,001.07	17,151.96	17,469.43
	V290	114.96	87.79	4.72	4.72	6	10	11,001.07	11,001.07	11,001.07	11,001.07	17,207.08	17,526.75
	V320	126.77	93.70	4.72	4.72	6	10	11,001.07	11,001.07	11,001.07	11,001.07	17,264.4	17,581.87
	V340	134.64	99.60	4.72	4.72	6	10	11,001.07	11,001.07	11,001.07	11,001.07	17,319.52	17,636.98
	V360	142.51	103.54	4.72	4.72	6	10	11,001.07	11,001.07	11,001.07	11,001.07	17,356.99	17,672.25
	V390	154.33	111.81	4.72	4.72	6	10	11,001.07	11,001.07	11,001.07	11,001.07	17,434.16	17,751.62
	V440	174.01	121.65	4.72	4.72	6	6	11,001.07	11,001.07	11,001.07	11,001.07	17,526.75	17,844.22
	V490	193.7	131.49	4.72	4.72	6	6	11,001.07	11,001.07	10,582.19	10,692.42	17,621.55	17,939.01
3 Stage Full Free Lift	TF360	144.17	79.921	42.28	31.77	6	6	11,001.07	11,001.07	11,001.07	11,001.07	17,509.11	17,941.22
	TF390	155.98	83.85	46.22	35.7	6	6	11,001.07	11,001.07	11,001.07	11,001.07	17,566.43	17,998.54
	TF420	167.79	87.79	50.15	39.64	6	6	11,001.07	11,001.07	10,582.19	10,582.19	17,623.75	18,055.86
	TF440	174.88	90.15	52.51	42	6	6	11,001.07	11,001.07	10,471.96	10,471.96	17,659.03	18,088.93
	TF460	183.14	93.70	56.06	45.55	6	6	11,001.07	10,912.88	10,361.73	10,251.5	17,709.73	18,141.84
	TF490	194.96	97.63	60	49.48	6	6	10,582.19	10,692.42	10,141.26	9920.80	17,767.05	18,199.16
	TF540	214.64	104.72	67.08	56.18	6	6	10,361.73	10,361.73	9,700.34	9,700.34	17,879.49	18,311.6
	TF590	234.72	111.81	74.17	63.66	6	6	10,031.03	10,031.03	9,369.64	9,369.64	17,967.67	18,399.78

* TF-Mast : Wide Visible 3-Stage Full Free Lift Mast with 1 Free Lift Cylinders.

*Standard

Load Capacity

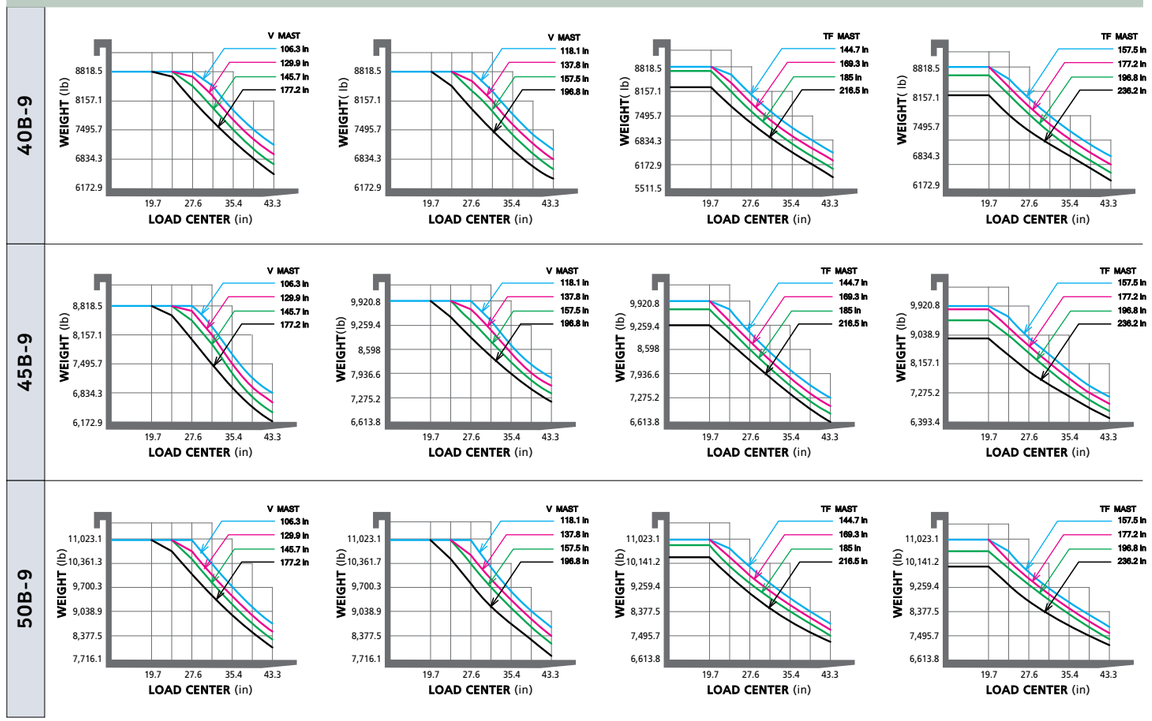

B-9 Series Options

Mast
- Refer to the Mast Specification

Fork Length (in)
40B-9
- 42, 48 (std), 53.9, 59.8, 65.7, 71.6, 77.6, 83.5, 94.5

45B-9
- 42, 48 (std), 53.9, 59.8, 65.7, 71.6, 77.6, 86.6, 94.5

50B-9
42, 48 (std), 53.9, 65.7, 71.6, 77.6, 86.6, 94.5

Sideshift

Tire
- Solid (std) / Non-marking / Pneumatic / Double Tire

Fingertip Control

Cold Storage (for -22° cold working environments)

Auto Fork Leveling

M.C.V
- 2-Spool (std)
- 3-Spool
- 4-Spool

Load Indicator

Side Battery Removal

Direction Switch on Lever

Side Mirror

Cabin (one door specification)
- Front + Roof
- Front + Roof + Rear
- Front + Roof + Rear + Door
- Front + Roof + Rear + Door + Heater
- Front + Roof + Rear + Door + Heater + Audio

BEST -IN- CLASS WARRANTY

THE 40/45/50B-9 COMES WITH OUR BEST-IN-CLASS WARRANTY

When you build better equipment, you can back them better. That's why Hyundai forklifts come with a 3-year, 4,000-hour warranty that sets a new standard for overall lowest cost of ownership.

ELEVEX™ Material Handling Solutions

MONTREAL (Head office)
19151 A, Cruickshank Avenue
Baie-D'Urfé (Québec) H9X 3N9

Phone: 418 694-4223
Toll free: 1 866 421-4223
info@elevex.ca

SAGUENAY
2305, Alexis-Le-Trotteur
St. Jonquière (Québec) G7X 9H8

elevex.ca

NO ONE DELIVERS MORE

HD HYUNDAI XITESOLUTION | MATERIAL HANDLING