Electric Counterbalance Forklift

E18 - E20

3,500 - 4,000 lb. Capacity | Series 346

→ Build to your specifications with options for 3- or 4-wheel configurations, two lifting capacities, and a catalogue of option packages.

→ Optimize your operation's energy efficiencies without sacrificing performance, using Linde Li-ION batteries and chargers.

→ Easily maneuver through tight operations and master trailer loading & unloading with Linde Combi-axle.

→ Minimize risk with best-in-class visibility. Drivers can work more accurately and efficiently.

STANDARD & OPTIONAL EQUIPMENT

	Model / Equipment	E18 - E20
Operator assistance	Easy, low-height battery exchange	●
	Battery exchange platform with rollers	○
	Linde Curve Control automatically reduces travel speed while turning	●
	Rear handle with horn button for comfort while driving in reverse	○
	Electronic seat belt monitoring with function interlock	○
	Advanced lighting options (LED Stripes, VertiLight)	○
	Linde BlueSpot, RedSpot, TruckSpot, and Red Warning Lines	○
	Automatic parking brake and ramp hold	●
Digitization	Linde Connect with data transmission	○
	Pre-operation checklist	○
	Linde Guardian - pedestrian awareness and zone speed control	○
	Warehouse terminal mounting and 12V power supply	○
Load Handling	Single-pedal travel controls	●
	Linde dual-pedal travel control system for fast reversing	○
	Three, electronic mast control levers on the seat armrest (Linde Load Control)	●
	Four, electronic mast control levers on the seat armrest (Linde Load Control)	○
	Three-function, electronically-controlled main hydraulic valve	●
	Four-function, electronically-controlled main hydraulic valve	○
	Tilting range (5º forward / 5º backward)	●
	Automatic tilt memory function	○
	Linde Combi-axle for best manueverability	●
Workplace	Standard 80.5" overhead guard	●
	Low-profile 78.0" overhead guard	○
	Drive-in / drive-through rack overhead guard	○
	Full-suspension driver's seat with standard vinyl covering	●
	Emergency power disconnect button	●
	Flat and curved panoramic rearview mirror	○
	Operator fan	○
	Full-color, 4.3" multi-function display unit	●
	High-visibility orange seat belt is easy to check at a distance	●
	Tilt adjustable steering column	●
	Dual, LED front worklights	●
	Amber warning lights and LED rear light bars	○
	Audible back-up alarm	○
	Fire extingusher	○
	LED illuminated clipboard	○
	Clear polycarbonate front and roof panels	○
	Universal scanner holder	○
	Front storage bin	○
	USB power supply inside armrest compartment	○
Mast	Standard, triplex, and quad lift masts	○
	Auxiliary hydraulic hose reeving	○
	Hydraulic accumulator for cushioned load protection	○
Carriage	ITA Class 2 fork carriage	○
	Integrated sideshifting carriage	○
	Integrated sideshifting fork-positioner	○
	Hang-on sideshifting carriage	○
	Load backrest, 36" / 48" / 60" / 72"	○
Tires	Cushion tires; black rubber and non-marking	●
	Solid-pneumatic tires; black rubber and non-marking	○
Drive system	36V or 48V electrical system	●
	Linde Li-ION batteries and chargers	○
	100% AC traction and lift motor systems	●
	UL Type-E construction	●
	UL Type-EE construction (spark-enclosed for hazardous locations)	○
	Low-temperature, cold-storage protection	○
	Maintenance-free wet-disc brakes	●
	1000-hour maintenance interval	●
	Standard warranty, 1-year / unlimited hours	●
	Powertrain warranty, 3-year / 6000-hours	●

● Standard equipment ○ Optional equipment

ANSI: Standard truck meets all applicable mandatory requirements of ANSI/ITSDF B56.1 standards for powered industrial trucks.
NOTE: Performance data may vary due to motor and system efficiency tolerances. The performance depicted represents nominal values obtained under typical operating conditions. Metric dimensions are in millimeters unless otherwise specified. All metric dimensions are not direct equivalents due to rounding data. The descriptions and specifications included on this data sheet were in effect at the time of printing. KION North America Corporation reserves the right to make improvements and changes in specification or design without notice and without incurring obligation. Please check with your authorized Linde dealer for information on possible updates or revisions.

TECHNICAL DATA

Characteristics	1.1	Manufacturer				Linde	
	1.2	Model				**E18**	
	1.2a	Series				346	
	1.3	Drive system				Battery	
	1.4	Operation				Seat	
	1.5	Capacity	Q	lb	kg	3,500	1,588
	1.6	Load center	c	in	mm	24	600
	1.8	Front overhang	x	in	mm	15.5	395
	1.9	Wheelbase	y	in	mm	55.9	1,420
Weights	2.1	Weight		lb	kg	8,070 [1]	3,660 [1]
	2.2	Axle loading, loaded front/rear		lb	kg	10,750 / 820	4,876 / 372
	2.3	Axle loading, unloaded front/rear		lb	kg	4,535 / 3,530	2,058 / 1,602
Wheels / Tires	3.1	Tire type				Cushion	
	3.2	Tire size, front				18 x 7 x 12⅛	
	3.3	Tire size, rear				15 x 5 x 11¼	
	3.5	Wheels, number front/rear (×=drivenwheels)				2x / 2	
	3.6	Tread, front	b10	in	mm	35.0	890
	3.7	Tread, rear	b11	in	mm	6.8	173
Dimensions	4.1	Tilt range, forward/backward		α/β (°)		See table	
	4.2	Height of mast, lowered	h1	in	mm	See table	
	4.3	Free lift	h2	in	mm	See table	
	4.4	Maximum fork height	H	in	mm	See table	
	4.7	Height of overhead guard	h6	in	mm	80.5	2,045
	4.8	Height of seat	h7	in	mm	42.5	1,080
	4.20	Length to face of forks	l2	in	mm	79.4	2,018
	4.21	Overall width	b1/b2	in	mm	42.0	1,068
	4.22	Fork dimensions	s/e/l	in	mm	1.5 x 4.0 x 42	40 x 100 x 1067
	4.23	Fork carriage, ITA Class/Type				2A	2A
	4.24	Fork carriage width	b3	in	mm	38.6	980
	4.31	Ground clearance, loaded, below mast	m1	in	mm	3.3	84
	4.32	Ground clearance, center of wheelbase	m2	in	mm	3.4	87
	4.34	Aisle width for pallets 40" x 48"	Ast	in	mm	137 [2]	3,467 [2]
	4.34a	Minimum right-angle stacking width		in	mm	79.5	2,020
	4.35	Turning radius	Wa	in	mm	64.0	1,625
Performance	5.1	Travel speed, loaded/unloaded (48v)		mph	km/h	11.6 / 12.8	18.7 / 20.6
	5.1	Travel speed, loaded/unloaded (36v)		mph	km/h	8.5 / 9.5	13.7 / 15.3
	5.2	Lift speed, loaded/unloaded (48v)		fpm	m/s	81 / 110	0.41 / 0.56
	5.2	Lift speed, loaded/unloaded (36v)		fpm	m/s	75 / 110	0.41 / 0.56
	5.3	Lowering speed, loaded/unloaded		fpm	m/s	100 / 98	0.51 / 0.50
	5.6	Maximum tractive force (48v)		lbf	N	2,780	12,350
	5.6	Maximum tractive force (36v)		lbf	N	1,910	8,500
	5.7	Gradeability, loaded/unloaded (48v)		%		19 / 24	
	5.7	Gradeability, loaded/unloaded (36v)		%		12 / 18	
	5.10	Service brake				Oil-submerged wet-disc	
Drive	6.1	Drive motor rating S2 60 min (48v)		hp	kW	2 x 6.1	2 x 4.5
	6.1	Drive motor rating S2 60 min (36v)		hp	kW	2 x 5.5	2 x 4.1
	6.2	Lift motor rating at S3 15% (48v)		hp	kW	13.4	9.9
	6.2	Lift motor rating at S3 15% (36v)		hp	kW	11.8	8.9
	6.3	Battery weight (minimum-maximum)		lb	kg	2,155 - 2,730	980 - 1,241
	6.4	Battery position, cable length, and connector		in	mm	B-30" / SB350	B-775mm / SB350
	6.5	Battery compartment size (maximum)	X / Y / Z	in	mm	38.6 x 24.9 x 25.6	981 x 632 x 650
	6.6	Battery specification (lead-acid, Type EO)		V / Ah		48V / 765Ah (max.) 36V / 1000Ah (max.)	
	6.7	Battery specification (Linde Li-ION)		V / Ah / kWh		48V / 736Ah / 34kWh	
Other	10.1	Operating pressure for attachments		psi	bar	2,500	170
	10.2	Oil volume for attachments		gpm	L/min	10	38

1) Includes nominal battery

2) Includes 6" (150mm) operating aisle clearance.

TECHNICAL DATA

Characteristics	1.1	Manufacturer				Linde						
	1.2	Model				**E20**		**E20C**		**E20P**		
	1.2a	Series				346		346		346		
	1.3	Drive system				Battery		Battery		Battery		
	1.4	Operation				Seat		Seat		Seat		
	1.5	Capacity	Q	lb	kg	4,000	1,815	4,000	1,815	4,000	1,815
	1.6	Load center	c	in	mm	24	600	24	600	24	600
	1.8	Front overhang	x	in	mm	15.5	395	15.5	395	15.5	395
	1.9	Wheelbase	y	in	mm	55.9	1,420	61.0	1,550	61.0	1,550
Weights	2.1	Weight		lb	kg	8,535 [1]	3,871 [1]	8,365 [1]	3,794 [1]	8,480 [1]	3,846 [1]
	2.2	Axle loading, loaded front/rear		lb	kg	11,495 / 1,040	5,213 / 472	11,395 / 970	5,168 / 440	11,570 / 910	5,248 / 412
	2.3	Axle loading, unloaded front/rear		lb	kg	4,515 / 4,020	2,048 / 1,824	4,555 / 3,810	2,065 / 1,729	4,775 / 3,705	2,166 / 1,680
Wheels / Tires	3.1	Tire type				Cushion		Cushion		Solid-pneumatic	
	3.2	Tire size, front				18 x 7 x 12⅛		18 x 7 x 12⅛		200/50 -10	
	3.3	Tire size, rear				15 x 5 x 11¼		16 x 6 x 10½		16x6 -8	
	3.5	Wheels, number front/rear (×=drivenwheels)				2x / 2		2x / 2		2x / 2	
	3.6	Tread, front	b10	in	mm	35.0	890	35.0	890	35.0	890
	3.7	Tread, rear	b11	in	mm	6.8	173	31.0	787	31.0	787
Dimensions	4.1	Tilt range, forward/backward		α/β (°)		See table		See table		See table	
	4.2	Height of mast, lowered	h1	in	mm	See table		See table		See table	
	4.3	Free lift	h2	in	mm	See table		See table		See table	
	4.4	Maximum fork height	H	in	mm	See table		See table		See table	
	4.7	Height of overhead guard	h6	in	mm	80.5	2,045	80.5	2,045	80.5	2,045
	4.8	Height of seat	h7	in	mm	42.5	1,080	42.5	1,080	42.5	1,080
	4.20	Length to face of forks	l2	in	mm	79.4	2,018	85.5	2,172	85.5	2,172
	4.21	Overall width	b1/b2	in	mm	42.0	1,068	42.0	1,068	46.0	1,168
	4.22	Fork dimensions	s/e/l	in	mm	1.5 x 4.0 x 42	40 x 100 x 1067	1.5 x 4.0 x 42	40 x 100 x 1067	1.5 x 4.0 x 42	40 x 100 x 1067
	4.23	Fork carriage, ITA Class/Type				2A	2A	2A	2A	2A	2A
	4.24	Fork carriage width	b3	in	mm	38.6	980	38.6	980	38.6	980
	4.31	Ground clearance, loaded, below mast	m1	in	mm	3.3	84	3.3	84	3.3	84
	4.32	Ground clearance, center of wheelbase	m2	in	mm	3.4	87	3.4	87	3.4	87
	4.34	Aisle width for pallets 40" x 48"	Ast	in	mm	137 [2]	3,467 [2]	143 [2]	3,630 [2]	143 [2]	3,630 [2]
	4.34a	Minimum right-angle stacking width		in	mm	79.5	2,020	85.9	2,183	85.9	2,183
	4.35	Turning radius	Wa	in	mm	64.0	1,625	70.4	1,788	70.4	1,788
Performance	5.1	Travel speed, loaded/unloaded (48v)		mph	km/h	11.6 / 12.8	18.7 / 20.6	11.6 / 12.8	18.7 / 20.6	11.6 / 12.8	18.7 / 20.6
	5.1	Travel speed, loaded/unloaded (36v)		mph	km/h	8.3 / 9.1	13.4 / 14.7	8.3 / 9.1	13.4 / 14.7	8.3 / 9.1	13.4 / 14.7
	5.2	Lift speed, loaded/unloaded (48v)		fpm	m/s	75 / 110	0.38 / 0.56	75 / 110	0.38 / 0.56	75 / 110	0.38 / 0.56
	5.2	Lift speed, loaded/unloaded (36v)		fpm	m/s	69 / 110	0.35 / 0.56	69 / 110	0.35 / 0.56	69 / 110	0.35 / 0.56
	5.3	Lowering speed, loaded/unloaded		fpm	m/s	100 / 98	0.51 / 0.50	100 / 98	0.51 / 0.50	100 / 98	0.51 / 0.50
	5.6	Maximum tractive force (48v)		lbf	N	2,920	13,000	2,920	13,000	2,920	13,000
	5.6	Maximum tractive force (36v)		lbf	N	2,000	8,900	2,000	8,900	2,000	8,900
	5.7	Gradeability, loaded/unloaded (48v)		%		18 / 22		18 / 22		18 / 22	18 / 22
	5.7	Gradeability, loaded/unloaded (36v)		%		11 / 14		11 / 14		11 / 14	11 / 14
	5.10	Service brake				Oil-submerged wet-disc		Oil-submerged wet-disc		Oil-submerged wet-disc	
Drive	6.1	Drive motor rating S2 60 min (48v)		hp	kW	2 x 6.1	2 x 4.5	2 x 6.1	2 x 4.5	2 x 6.1	2 x 4.5
	6.1	Drive motor rating S2 60 min (36v)		hp	kW	2 x 5.5	2 x 4.1	2 x 5.5	2 x 4.1	2 x 5.5	2 x 4.1
	6.2	Lift motor rating at S3 15% (48v)		hp	kW	13.4	9.9	13.4	9.9	13.4	9.9
	6.2	Lift motor rating at S3 15% (36v)		hp	kW	11.8	8.9	11.8	8.9	11.8	8.9
	6.3	Battery weight (minimum-maximum)		lb	kg	2,155 - 2,730	980 - 1,241	2,155 - 2,730	980 - 1,241	2,155 - 2,730	980 - 1,241
	6.4	Battery position, cable length, and connector		in	mm	B-30" / SB350	B-775mm / SB350	B-30" / SB350	B-775mm / SB350	B-30" / SB350	B-775mm / SB350
	6.5	Battery compartment size (maximum)	X/Y/Z	in	mm	38.6 x 24.9 x 25.6	981 x 632 x 650	38.6 x 24.9 x 25.6	981 x 632 x 650	38.6 x 24.9 x 25.6	981 x 632 x 650
	6.6	Battery specification (lead-acid, Type EO)		V / Ah		48V / 765Ah (max.) 36V / 1000Ah (max.)		48V / 765Ah (max.) 36V / 1000Ah (max.)		48V / 765Ah (max.) 36V / 1000Ah (max.)	
	6.7	Battery specification (Linde Li-ION)		V / Ah / kWh		48V / 736Ah / 34kWh		48V / 736Ah / 34kWh		48V / 736Ah / 34kWh	
Other	10.1	Operating pressure for attachments		psi	bar	2,500	170	2,500	170	2,500	170
	10.2	Oil volume for attachments		gpm	L/min	10	38	10	38	10	38

1) Includes nominal battery

2) Includes 6" (150mm) operating aisle clearance.

TECHNICAL DATA

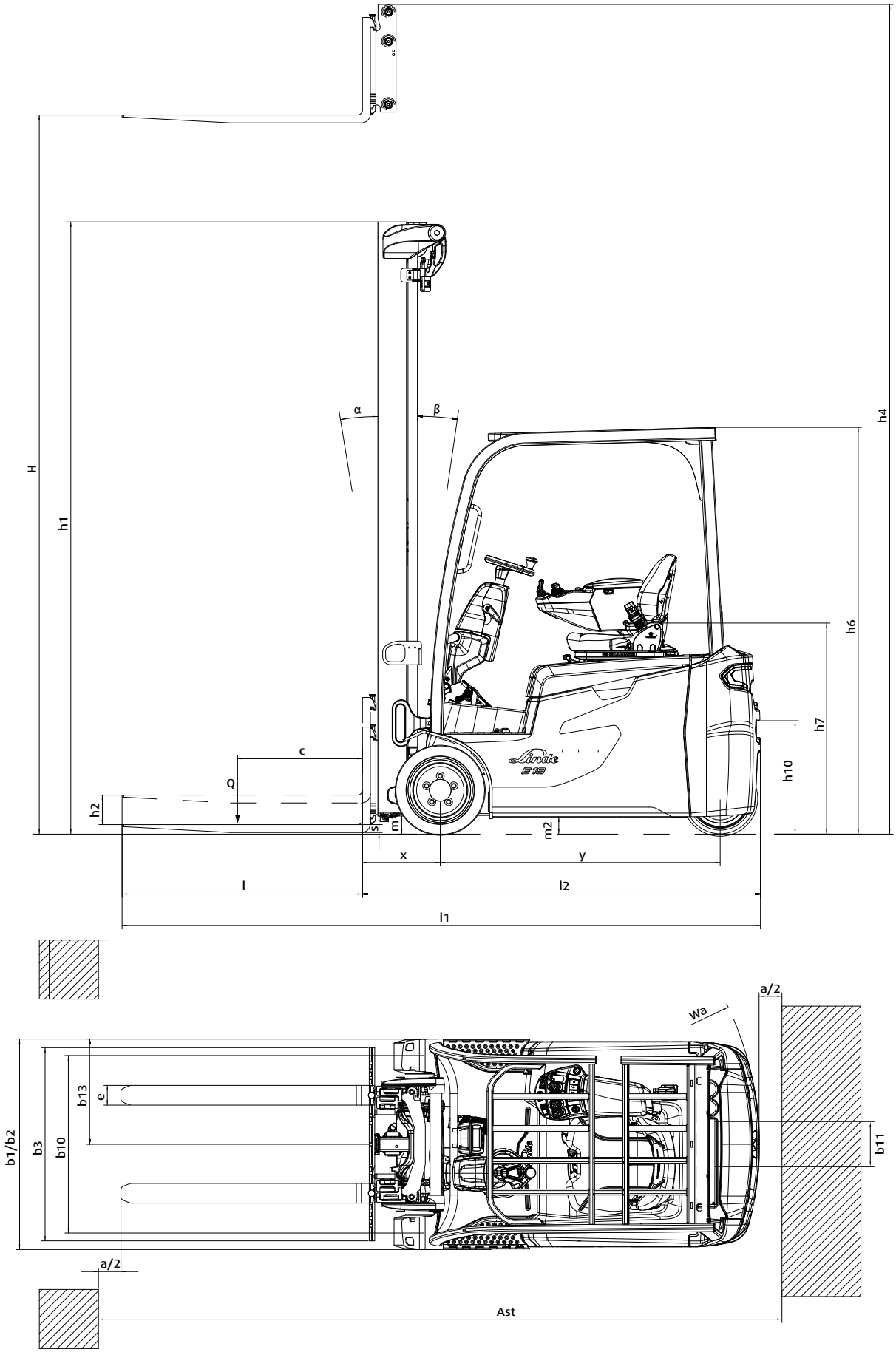

For corresponding data, see Technical Data Chart

TECHNICAL DATA

E18

Mast Table								Lifting capacity at 24" load center							
Mast Type	Tilt	h1 (lowered height)		H (lift height)		h2 (free lift)		Fork Carriage		Integrated Sideshifter		Integrated sideshifting fork-positioner		Hang-on Sideshifter	
	Degrees	in	mm	in	mm	in	mm	lb	kg	lb	kg	lb	kg	lb	kg
Triplex	5F / 5B	77.8	1,976	166.2	4222	53.9	1,368	3,500	1,590	3,500	1,590	3,290	1,495	3,240	1,480
	5F / 5B	79.8	2,026	172.1	4372	55.8	1,418	3,500	1,590	3,500	1,590	3,290	1,495	3,240	1,480
	5F / 5B	83.7	2,126	187.8	4772	59.8	1,518	3,500	1,590	3,500	1,590	3,290	1,495	3,240	1,480
	5F / 5B	87.6	2,226	195.7	4972	63.7	1,618	3,500	1,590	3,500	1,590	3,290	1,495	3,240	1,480
	5F / 5B	91.6	2,326	207.5	5272	67.6	1,718	3,500	1,590	3,500	1,590	3,290	1,495	3,240	1,480
	5F / 5B	97.5	2,476	217.3	5522	73.5	1,868	3,500	1,590	3,500	1,590	3,290	1,495	3,240	1,480
	5F / 5B	103.4	2,626	235.1	5972	79.4	2,018	3,500	1,590	3,500	1,590	3,290	1,495	3,240	1,480
	5F / 5B	107.3	2,726	246.9	6272	83.4	2,118	3,500	1,590	3,500	1,590	3,290	1,495	3,240	1,480
Quad	3F / 3B	83.1	2,112	240.1	6100	58.4	1,484	3,500	1,590	3,500	1,590	-	-	3,240	1,480
	3F / 3B	89.2	2,265	259.4	6589	64.4	1,637	3,230	1,470	3,230	1,470	-	-	2,400	1,100
	3F / 3B	95.2	2,417	278.5	7075	70.4	1,789	2,600	1,180	2,600	1,180	-	-	2,140	975

E20

Mast Table								Lifting capacity at 24" load center							
Mast Type	Tilt	h1 (lowered height)		H (lift height)		h2 (free lift)		Fork Carriage		Integrated Sideshifter		Integrated sideshifting fork-positioner		Hang-on Sideshifter	
	Degrees	in	mm	in	mm	in	mm	lb	kg	lb	kg	lb	kg	lb	kg
Triplex	5F / 5B	77.8	1,976	166.2	166.2	53.9	1,368	4,000	1,815	4,000	1,815	3,770	1,710	3,710	1,695
	5F / 5B	79.8	2,026	172.1	172.1	55.8	1,418	4,000	1,815	4,000	1,815	3,770	1,710	3,710	1,695
	5F / 5B	83.7	2,126	187.8	187.8	59.8	1,518	4,000	1,815	4,000	1,815	3,770	1,710	3,710	1,695
	5F / 5B	87.6	2,226	195.7	195.7	63.7	1,618	4,000	1,815	4,000	1,815	3,770	1,710	3,710	1,695
	5F / 5B	91.6	2,326	207.5	207.5	67.6	1,718	4,000	1,815	4,000	1,815	3,770	1,710	3,710	1,695
	5F / 5B	97.5	2,476	217.3	217.3	73.5	1,868	3,960	1,800	3,960	1,800	3,730	1,695	3,670	1,680
	5F / 5B	103.4	2,626	235.1	235.1	79.4	2,018	3,650	1,660	3,650	1,660	3,440	1,560	3,380	1,545
	5F / 5B	107.3	2,726	246.9	246.9	83.4	2,118	3,440	1,565	3,440	1,565	3,240	1,470	3,190	1,460
Quad	3F / 3B	83.1	2,112	240.1	240.1	58.4	1,484	3,500	1,590	3,500	1,590	-	-	3,240	1,480
	3F / 3B	89.2	2,265	259.4	259.4	64.4	1,637	3,230	1,470	3,230	1,470	-	-	2,400	1,100
	3F / 3B	95.2	2,417	278.5	278.5	70.4	1,789	2,600	1,180	2,600	1,180	-	-	2,140	975

TECHNICAL DATA

E20C

Mast Table								Lifting capacity at 24" load center							
Mast Type	Tilt	h1 (lowered height)		H (lift height)		h2 (free lift)		Fork Carriage		Integrated Sideshifter		Integrated sideshifting fork-positioner		Hang-on Sideshifter	
	Degrees	in	mm	in	mm	in	mm	lb	kg	lb	kg	lb	kg	lb	kg
Triplex	5F / 5B	77.8	1,976	166.2	4,222	53.9	1,368	4,000	1,815	4,000	1,815	3,770	1,710	3,710	1,695
	5F / 5B	79.8	2,026	172.1	4,372	55.8	1,418	4,000	1,815	4,000	1,815	3,770	1,710	3,710	1,695
	5F / 5B	83.7	2,126	187.8	4,772	59.8	1,518	4,000	1,815	4,000	1,815	3,770	1,710	3,710	1,695
	5F / 5B	87.6	2,226	195.7	4,972	63.7	1,618	4,000	1,815	4,000	1,815	3,770	1,710	3,710	1,695
	5F / 5B	91.6	2,326	207.5	5,272	67.6	1,718	4,000	1,815	4,000	1,815	3,770	1,710	3,710	1,695
	5F / 5B	97.5	2,476	217.3	5,522	73.5	1,868	4,000	1,815	4,000	1,815	3,770	1,710	3,710	1,695
	5F / 5B	103.4	2,626	235.1	5,972	79.4	2,018	3,030	1,380	3,030	1,380	2,850	1,295	2,800	1,280
	5F / 5B	107.3	2,726	246.9	6,272	83.4	2,118	2,900	1,320	2,900	1,320	2,720	1,235	2,680	1,225
Quad	3F / 3B	83.1	2,112	240.1	6,100	58.4	1,484	3,500	1,590	3,500	1,590	-	-	3,240	1,480
	3F / 3B	89.2	2,265	259.4	6,589	64.4	1,637	3,230	1,470	3,230	1,470	-	-	2,400	1,100
	3F / 3B	95.2	2,417	278.5	7,075	70.4	1,789	2,600	1,180	2,600	1,180	-	-	2,140	975

E20P

Mast Table								Lifting capacity at 24" load center							
Mast Type	Tilt	h1 (lowered height)		H (lift height)		h2 (free lift)		Fork Carriage		Integrated Sideshifter		Integrated sideshifting fork-positioner		Hang-on Sideshifter	
	Degrees	in	mm	in	mm	in	mm	lb	kg	lb	kg	lb	kg	lb	kg
Triplex	5F / 5B	77.8	1,976	166.2	4,222	53.9	1,368	4,000	1,815	4,000	1,815	3,770	1,710	3,710	1,695
	5F / 5B	79.8	2,026	172.1	4,372	55.8	1,418	4,000	1,815	4,000	1,815	3,770	1,710	3,710	1,695
	5F / 5B	83.7	2,126	187.8	4,772	59.8	1,518	4,000	1,815	4,000	1,815	3,770	1,710	3,710	1,695
	5F / 5B	87.6	2,226	195.7	4,972	63.7	1,618	4,000	1,815	4,000	1,815	3,770	1,710	3,710	1,695
	5F / 5B	91.6	2,326	207.5	5,272	67.6	1,718	3,870	1,760	3,870	1,760	3,650	1,655	3,590	1,640
	5F / 5B	97.5	2,476	217.3	5,522	73.5	1,868	3,740	1,700	3,740	1,700	3,530	1,600	3,470	1,590
	5F / 5B	103.4	2,626	235.1	5,972	79.4	2,018	3,520	1,600	3,520	1,600	3,320	1,505	3,260	1,495
	5F / 5B	107.3	2,726	246.9	6,272	83.4	2,118	3,380	1,535	3,380	1,535	3,180	1,440	3,130	1,430
Quad	3F / 3B	83.1	2,112	240.1	6,100	58.4	1,484	3,500	1,590	3,500	1,590	-	-	3,240	1,480
	3F / 3B	89.2	2,265	259.4	6,589	64.4	1,637	3,230	1,470	3,230	1,470	-	-	2,400	1,100
	3F / 3B	95.2	2,417	278.5	7,075	70.4	1,789	2,600	1,180	2,600	1,180	-	-	2,140	975

CHARACTERISTICS

Linde Material Handling

Member of KION Group

Performance

→ Three performance modes: Performance, Efficiency, and Economy

→ Precise Electronic fingertip mast controls

→ Optional: Cold-storage protection package

Ergonomics

→ Standard adjustable full-suspension seat

→ Lower front plate increases fork visibility*

→ Tilt-adjustable steering column

Technology

→ Linde Li-ION batteries and chargers*

→ Upgrade to Linde Connect with no additional hardware*

→ Linde Combi-axle increases maneuverability

Service

→ 1,000-hour maintenance intervals

→ Maintenance-free wet-disc brakes

→ 4.3" full-color interactive / diagnostic display*

**Features introduced in new E18-E20 generation.*

ELEVEX™ Material Handling Solutions

MONTREAL (Head office)
19151 A, Cruickshank Avenue
Baie-D'Urfé (Québec) H9X 3N9
Phone: 418 694-4223
Toll free: 1 866 421-4223
info@elevex.ca
elevex.ca

QUEBEC
1279, Paul-Émile Giroux St. Suite 200
Québec (Québec) G1C 0K9

SAGUENAY
2305, Alexis-Le-Trotteur
St. Jonquière (Québec) G7X 9H8