STAND-UP ELECTRIC COUNTERBALANCED TRUCK

E18S / E20S

3,500 - 4,000 lbs. Capacity

Series 1346

→ The Series 1346 is perfectly suited for life at a busy loading dock. The low-height suspended platform, small footprint and robust frame are purposefully designed for highly challenging applications

→ The most spacious operator compartment in the industry combined with adjustable ergonomics and flexible foot placement reduces fatigue-related injuries throughout the work day

→ The heavy-duty chassis and wrap-around steel bumper protect the truck from impact damage that is common at loading docks and crowded staging areas

→ The low-profile front cover and nested mast rails increase visibility of the forks and provide line-of-sight to the drive tires when working inside small clearance containers

→ The interactive display unit includes on-board diagnostics and guided calibration to simplify troubleshooting and support scheduled maintenance

STANDARD & OPTIONAL EQUIPMENT

STANDARD

- 36V electrical system
- 100% AC drive and lift motor technology
- Auto-deceleration with regenerative braking
- Automatic parking brake
- Linde Curve Assist (speed control)
- Voltage converter (12-volt / 300 Watt)
- Long-life electronic horn
- Forward steering (forks leading)
- 18" x 7" x 12 1/8" cushion drive tires
- 10" x 5" x 6 1/2" cushion steer tires
- 18.5" wide (E18S) battery compartment
- 20.5" wide (E20S) battery compartment
- Side battery removal with rollers
- 7 degree forward / 5 degree backward tilt with cushioned end stops
- Tilt Assist function
- Six-roller, Class II fork carriage
- 88" high overhead guard
- Overhead guard ready for drive-in rack
- Low step-height operating platform
- Suspended floorplate for vibration/impact isolation
- Cushioned operator compartment surfaces
- Fixed document holder
- Beverage holder
- Recessed tool storage
- Integrated tie-down cutouts for transport hook / chains
- Multi-function control handle
- Adjustable-height armrest controls
- Adjustable-height steering column
- Precise, on-demand hydrostatic steering system
- Full, proportional control of hydraulics
- Four-function main hydraulic control valve
- 5-micron filter for hydraulic system protection
- Dual, front worklights (halogen)
- Standard on/off key switch
- UL Type E construction
- Multi-function display unit with onboard diagnostics
- Guided, on-board calibration of sensors
- CAN bus communications
- Error Code display with detailed text
- Selectable performance modes
- Programmable travel speed
- Steering angle indicator
- Battery discharge indicator with interrupt
- Emergency disconnect button
- 1000-hr planned maintenance intervals
- 3-year / 6000-hr standard warranty
- Tool-free service panel access
- Operator manual (English)

OPTIONAL

- Lithium-ion configuration (36V)
- Lithium-ion battery and charger
- Reverse steering (forks trailing)
- 18" x 7" x 12 1/8" non-marking cushion drive tires
- 10" x 5" x 6 1/2" non-marking cushion steer tires
- Static discharge strap
- 3-Stage mast with freelift
- 4-Stage mast with freelift
- Electronically-adjusted tilting range
- Tilt position memory
- Six-roller, Class II integrated sideshifter
- Class II hang-on sideshifter
- Various Class II fork configurations
- Various load backrest extension heights
- Multi-function control handle (inverted axis)
- Clamp release interlock control function
- Auxiliary function hydraulic hose lines
- Dual, front worklights (LED)
- Rear worklights (halogen / LED)
- Overhead guard mounted Bluespot / Redspot
- Keyless on/off power switch
- Access control by keypad and PIN
- Operator fan
- Amber flashing strobe light
- Back-up alarm
- Interior compartment light
- Fire extinguisher (2.5 lb)
- UL Type EE construction
- Cold-storage protection to -14 degrees F
- 1-year / 2000-hr warranty extension
- Operator manual (French / Spanish)

SERIES 1346 TECHNICAL DATA

FEBRUARY 2020

Characteristics	1.1	Manufacturer				LINDE			
	1.2	Model designation				E18S		E20S	
	1.3	Power unit				Battery		Battery	
	1.4	Operation				Standing		Standing	
	1.5	Load capacity	Q	lbs	kg	3500	1588	4000	1815
	1.6	Load center	c	in	mm	24	600	24	600
	1.8	Axle center to fork face	x	in	mm	13.2	335	13.2	335
	1.9	Wheelbase	y	in	mm	46.2	1174	48.2	1225
Weights	2.1	Service weight (+/- 5.0%)		lbs	kg	8695	3945	9687	4395
	2.2	Axle load, with load, front/rear		lbs	kg	10976/1477	4980/670	12188/1400	5530/635
	2.3	Axle load, without load, front/rear		lbs	kg	4518/4408	2050/2000	5113/4573	2320/2075
Wheels/Tires	3.1	Tire type, front / rear				Cushion/cushion		Cushion/cushion	
	3.2	Tire size, front				18" x 7" x 12 1/8"		18" x 7" x 12 1/8"	
	3.3	Tire size, rear				10" x 5" x 6 1/2"		10" x 5" x 6 1/2"	
	3.5	Wheels, number front / rear (X=driven)				2x/2		2x/2	
	3.6	Track width,front	b_{10}	in	mm	35.5	902	35.5	902
	3.7	Track width, rear	b_{11}	in	mm	6.7	170	6.7	170
Dimensions	4.1	Mast tilt, forward/backward				7° / 5°		7° / 5°	
	4.2	Height of mast, lowered*	h_1	in	mm	88	2225	88	2225
	4.3	Free lift*	h_2	in	mm	63	1618	63	1618
	4.4	Lift height*	H	in	mm	195	4960	195	4960
	4.7	Height of overhead guard	h_6	in	mm	88	2235	88	2235
	4.8	Height of operating platform	h_7	in	mm	8	200	8	200
	4.19	Overall length	l_1	in	mm	110	2792	112	2842
	4.2	Length to fork face	l_2	in	mm	68	1725	70	1775
	4.21	Overall width	b_1/b_2	in	mm	42.5	1080	42.5	1080
	4.22	Fork dimensions	s/e/l	in	mm	1.5 x 4 x 42	40 x 100 x 1067	1.5 x 4 x 42	40 x 100 x 1067
	4.23	Fork carriage to ISO 2328, Class/Form A, B				2A		2A	
	4.24	Width of fork carriage	b_3	in	mm	38.6	980	38.6	980
	4.31	Ground clearance with load, mast	m_1	in	mm	3.1	78	3.1	78
	4.32	Ground clearance with load, center of wheel-base	m_2	in	mm	3.9	98	3.9	98
	4.33	Load dimension b_{12}x l_6 crossways	b_{12}x l_6	in	mm	48 x 40	1219 x 1016	48 x 40	1219 x 1016
	4.34	Aisle width predetermined load dimensions	Ast	in	mm	121	3082	123	3127
	4.34.1	Aisle width for pallets 1000 x 1200 crossways	Ast	in	mm	127	3214	128	3259
	4.34.2	Aisle width for pallets 800 x 1200 crossways	Ast	in	mm	125	3186	127	3231
	4.35	Turning radius	Wa	in	mm	55	1400	57	1445
Performance	5.1	Travel speed, with/without load		mph	kph	7 / 7.5	11.2 / 12.0	7 / 7.5	11.2 / 12.0
	5.2	Lifting speed, with/without load		ft/min	m/s	65 / 107	0.33 / 0.54	61 / 107	0.31 / 0.54
	5.3	Lowering speed, with/without load		ft/min	m/s	95 / 85	0.48 / 0.43	95 / 85	0.48 / 0.43
	5.7	Gradeability, with/without load		%	%	17/20		17/20	
	5.10	Service brakes				Electrical		Electrical	
Drive	6.1	Drive motor rating (60 minute rating)			kW	4.1 x 2		4.1 x 2	
	6.2	Lift motor, 15% rating			kW	9		9	
	6.4	Battery voltage / rated capacity			V/Ah	36 / 875		36 / 1000	
	6.5	Battery weight (nominal)		lbs	kg	2486	1128	2834	1286
Add'l	10.1	Working pressure of attachments		psi	bar	2175	150	2175	150
	10.2	Oil flow for attachments		gpm	l/min	8.5	32	8.5	32
	10.7	Mean noise level at driver's ear			dB(A)	68		68	

* 88" / 195" Triplex Mast

NOTICE: Products are subject to change without notice. Our products are continuously being improved, all conditions, terms, and specifications are subject to change at any time.

SERIES 1346 TECHNICAL DRAWINGS

February 2020

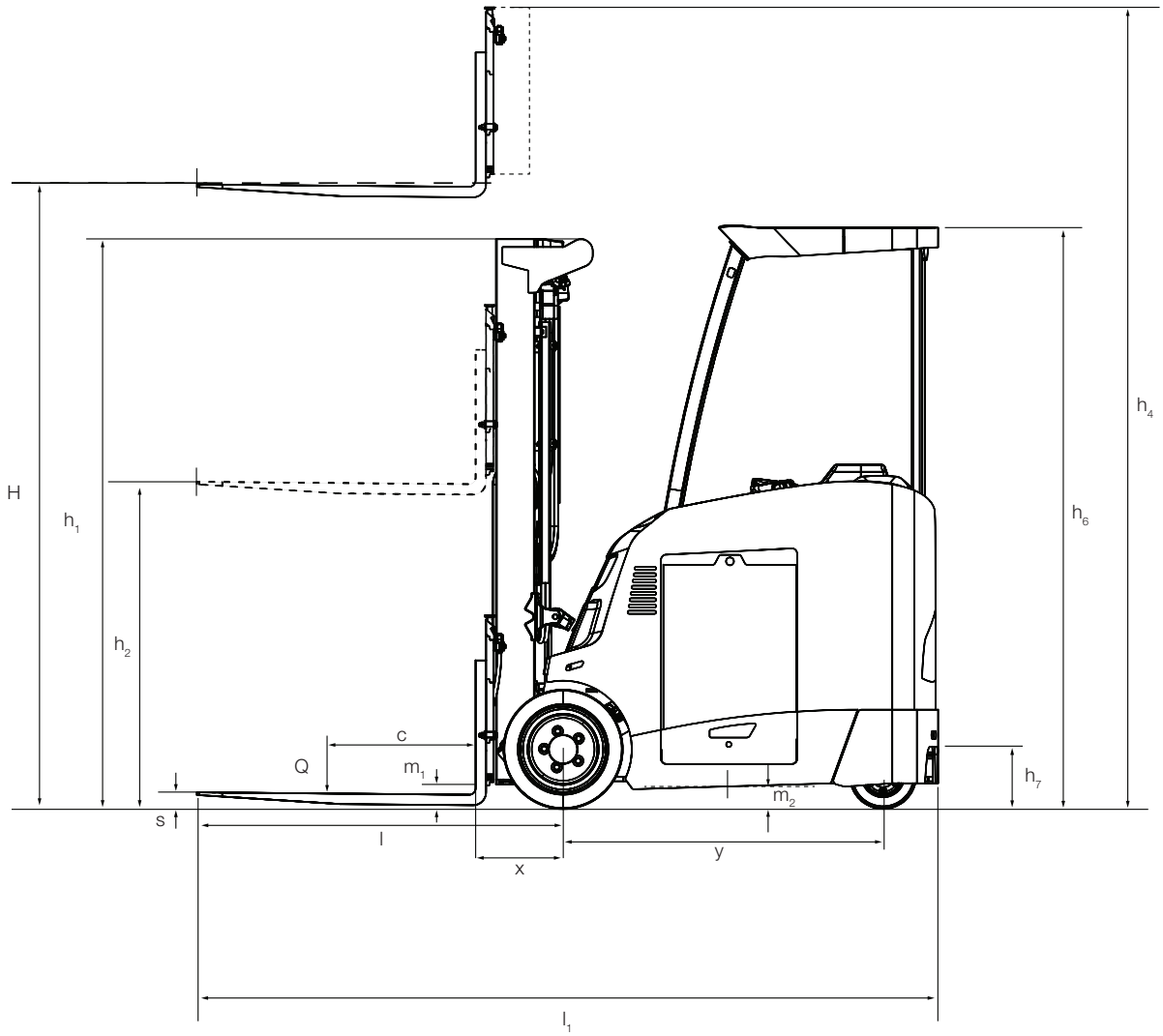

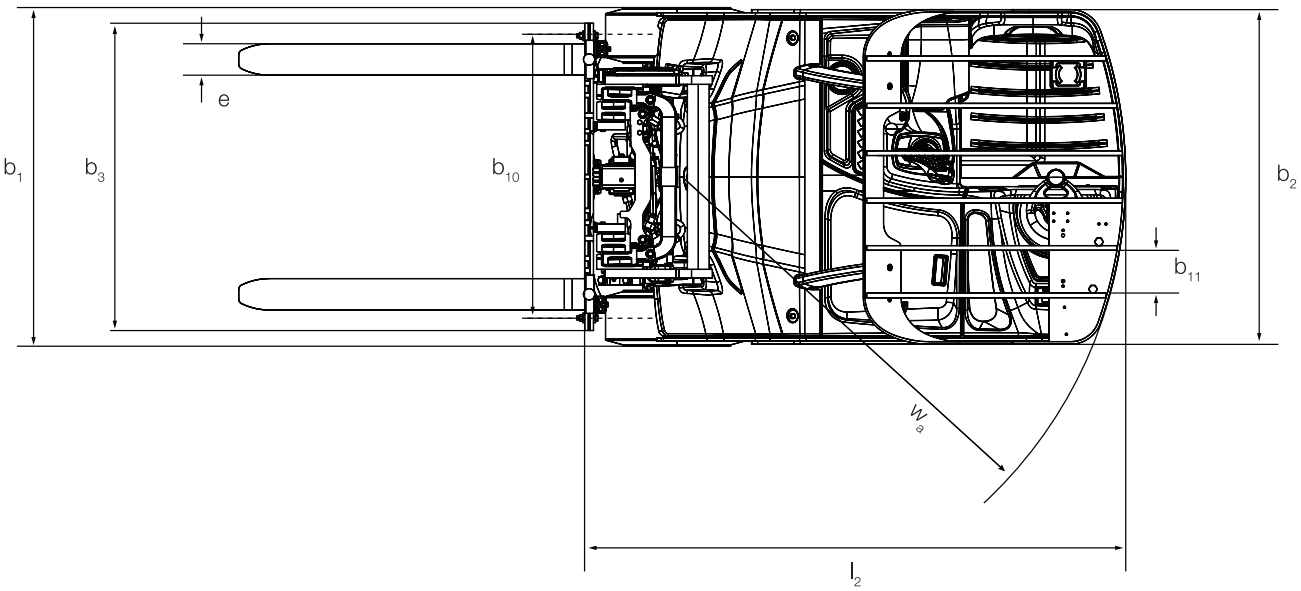

*Refer to Technical Data Chart

FEATURES

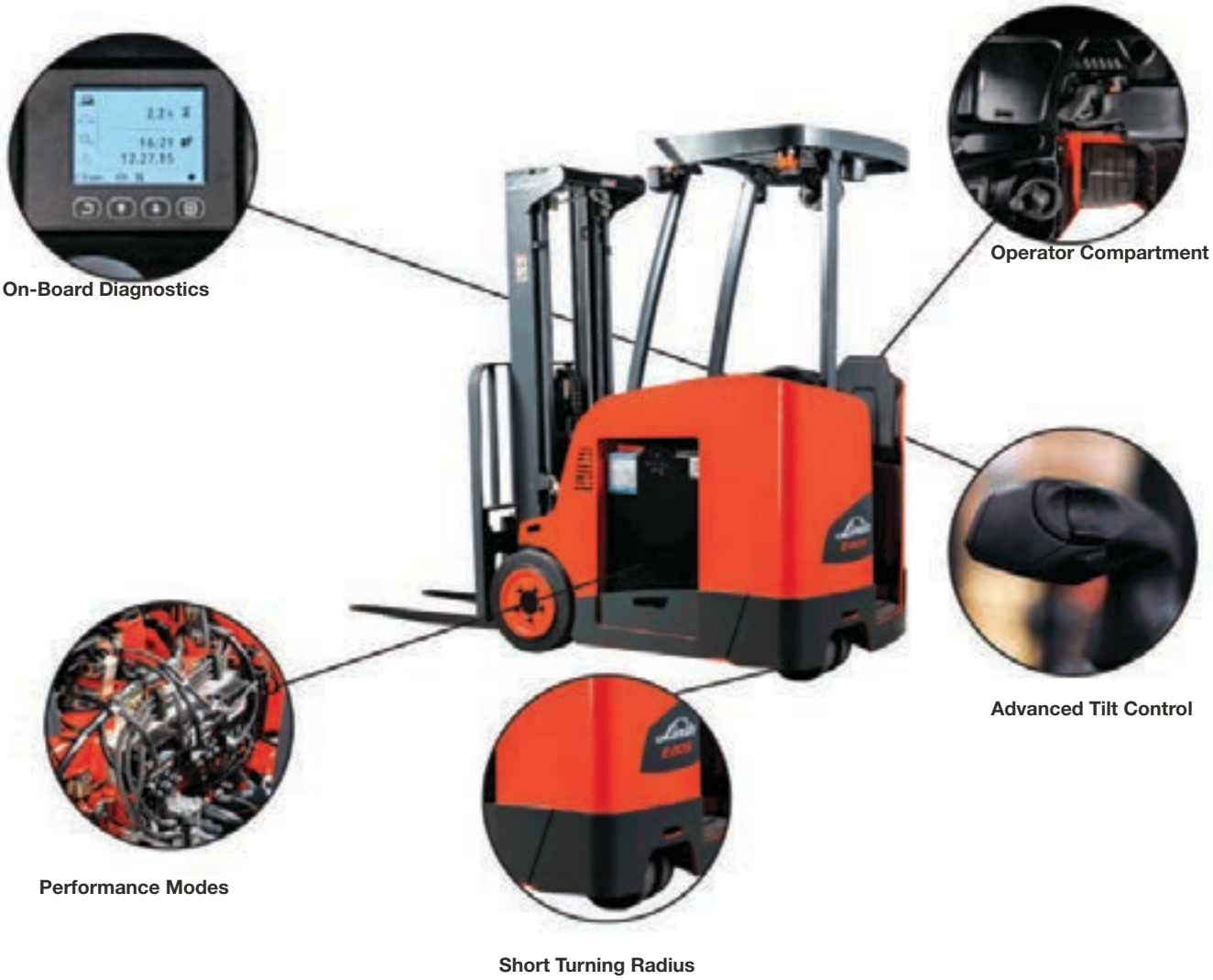

Linde Series 1346 - E18S / E20S Five Features

- **Advanced Tilt Control:** The advanced tilt control feature allows an operator to always have their forks in the position they need. With the click of a button, the tilt angle memory function automatically stops the mast at a stored postition.
- **Performance Modes:** The electronically controlled drive and hydraulic functions optimize performance and feature three operational modes: Performance, Productivity and Efficiency.
- **Short Turning Radius:** The Series 1346 utilizes dual drive motors, a nested mast design and a short wheelbase to make turning in the tightest of spaces possible.
- **On-Board Diagnostics:** Linde's on-board diagnostic system points to whatever issue needs to be resolved. This makes repairs faster by minimizing the diagnostic times required to get your truck back in service.
- **Operator Compartment:** The operator compartment has a multitude of features, including an adjustable steer tiller and control handle, coupled with the widest compartment in the industry, keeping an operator comfortable and productive all day long.

Linde

Linde
E 20

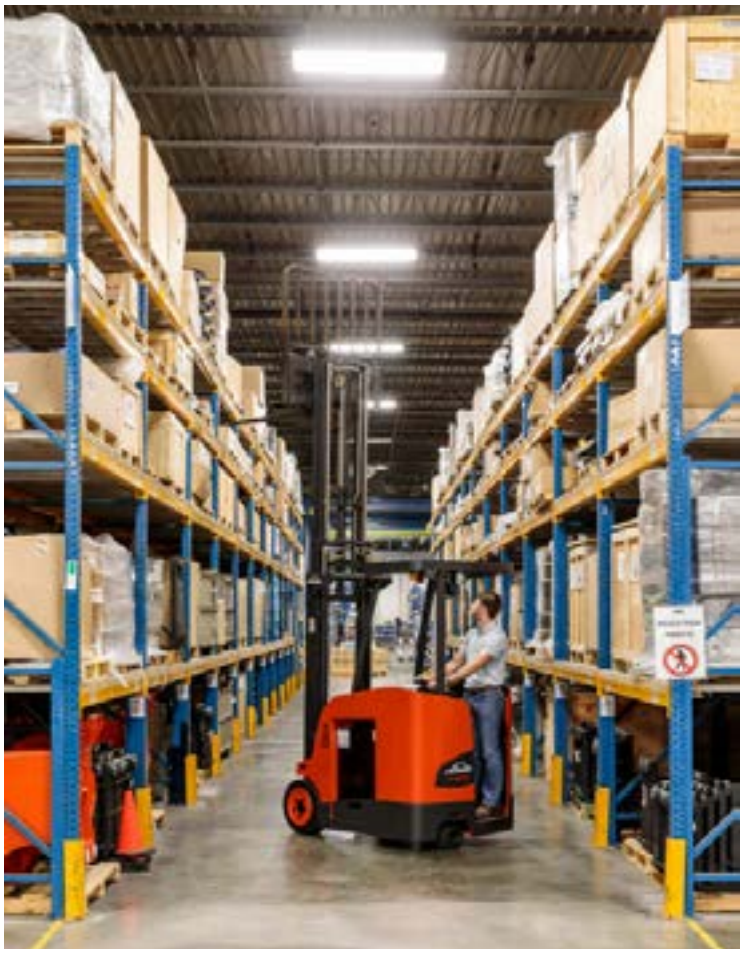

Linde Material Handling
Linde
NON NORTH AMERICA

ANSI: Standard truck meets all applicable mandatory requirements of ANSI/ITSDF B56.1 standards for powered industrial trucks.
NOTE: Performance data may vary due to motor and system efficiency tolerances. The performance depicted represents nominal values obtained under typical operating conditions. Metric dimensions are in millimeters unless otherwise specified. All metric dimensions are not direct equivalents due to rounding data. The descriptions and specifications included on this data sheet were in effect at the time of printing. KION North America Corporation reserves the right to make improvements and changes in specification or design without notice and without incurring obligation. Please check with your authorized Linde dealer for information on possible updates or revisions.

ELEVEX™
Material Handling Solutions

MONTREAL (Head office)
19151 A, Cruickshank Avenue
Baie-D'Urfé (Québec) H9X 3N9
Phone: 418 694-4223
Toll free: 1 866 421-4223
info@elevex.ca
elevex.ca

QUEBEC
1279, Paul-Émile Giroux St. Suite 200
Québec (Québec) G1C 0K9

SAGUENAY
2305, Alexis-Le-Trotteur
St. Jonquière (Québec) G7X 9H8

linde_spec_1346_1017
USA_v1_11012019-0731b