ELECTRIC WALKIE / RIDER TRUCK

EW30 / EW40 / EWR30 / EWR40

6,000 - 8,000 lbs. Capacity

Series 1101

→ We listened to the customer and designed a pallet truck that can withstand the most demanding duty cycle, along with making sure the operator is comfortable

→ The Series 1101 utilizes 100% AC motor technology with the latest controls, allowing the operator to smoothly operate the truck through dock work, transporting heavy loads, and order picking

→ The largest operator foot space in its class with a premium floor mat ensures enough space to comfortably change foot positioning

→ A one-piece cover provides noise reduction and full access to key components with 1,000 hour maintenance intervals

STANDARD & OPTIONAL EQUIPMENT

STANDARD

- 48" long forks
- 27" fork spread
- Standard construction operating temperatures: +32°F to +120°F
- Smooth polyurethane drive tire - Smooth Rubber -12" x 5"
- Single polyurethane load wheels - 3.25" x 6.375"
- Heavy-duty casters
- Display
  - *-Battery state of charge*
  - *-Hour meter*
  - *-Low battery lift interrupt*
  - *-Fault indicator*
- Manual steering
- Key ignition switch
- 24V AC control electrical system
- Grab bar with soft grip
- AC traction motor
- Auto Deceleration System with regenerative braking
- 31.5" x 13.5" open battery compartment
- Electro-mechanical parking brake
- UL Classification "E"
- Electronic horn
- Ergonomically designed, impact resistant, aluminum reinforce control handle with twist grip control
- Steel pallet entry rollers
- Two-piece load wheel axles
- 3.25" lowered / 6" lift height / 9.25" overall raised
- Heavy-duty fork construction with reinforced fork tips
- Heavy-duty,lift linkage with lubrication fittings
- Cushioned poly mat

OPTIONAL

- UL Classification "EE"
- Electric power steering
- Battery rollers
- Convenience tray (battery-mounted)
- Audible alarm
- Travel alarm
- Easy Pick with coast control
- Fork lengths
  - -36" long forks
  - -42" long forks
  - -60" long forks
  - -84" long forks
  - -96" long forks
  - -144" long forks
- Drive tire
  - -Rubber
  - -Polyurethane
  - -Non-marking rubber
  - -Crowned polyurethane
  - -Siped polyurethane
- Load wheels
  - -Single, dual and tandem
  - -2 bearing and 4 bearing
  - -Standard bearing and sealed bearing
- Load backrest
  - -48" high
  - -60" high
  - -72" high
- Application / Environmental Construction
  - -Cooler/Freezer Package
  - -Wash Down Package
  - -Corrosion Package

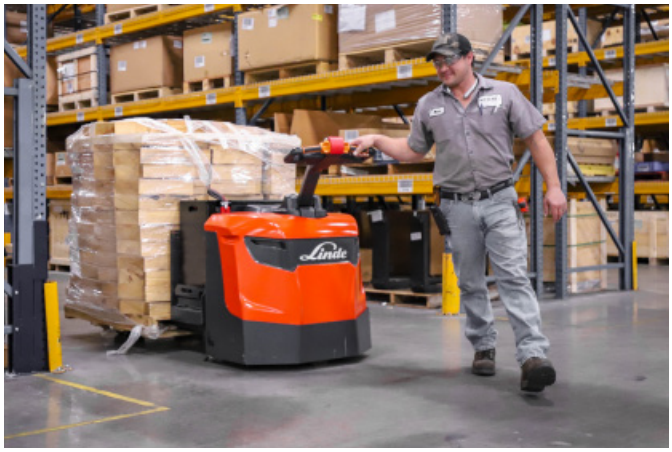

FEATURES

Direct Electric Steering

AC Controls

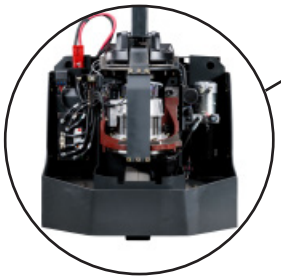

Open Access to Components

Reinforced Forks

Large Operator Platform

Linde Series 1101 Five Features

- **Motor Compartment Cover:** The Series 1101 features a one-piece, lift off motor compartment cover. This thermosetting resin cover is a product of the latest scientific advances in the field of chemistry. In addition to its resistance to rust and corrosion, these covers offer superior impact strength, durability, and lifelong proper fit. The same rugged material is used today by most large construction machinery OEM's.
- **Operator controls:** The operator control handle features a heavy-duty cast design / steel poly construction. Soft-touch accelerator twist grips govern travel direction, speed, and also features automatic return to neutral.
- **Drive Motor:** The Series 1101 features a 24-volt, high power, AC drive motor. This high performance motor allows for maximum productivity and excellent reliability. Extended maintenance intervals for motors and complete drive systems are a direct result of this new AC technology.
- **Frame:** Truck frames feature fixed platform height and all seam-welded unitized construction. Plate steel contoured to shape for rigid strength provides maximum durability and protection for all vital components. The battery compartment is an integral part of the chassis, further adding strength to the frame.
- **Travel Control:** The AC motor controller provides exceptional flexibility by providing user tailored parameters to meet a wide variety of application requirements. The controller provides efficient use of battery voltage and has an extremely wide torque and speed range. In addition, full regeneration capability, smooth low speed control, and zero speed ramp hold applications are realized. Environmental protection is enhanced by the robust construction of the controller and the use of sealed wiring harness connectors to prevent moisture and contaminants from interrupting truck operation in all environments.

EW TECHNICAL DATA

February 2020

Characteristics	1.1	Manufacturer				LINDE			
	1.2	Model designation				EW30		EW40	
	1.3	Power unit				Electric		Electric	
	1.4	Operation				Walk		Walk	
	1.5	Load capacity	Q	lbs	kg	6000	2722	8000	3629
	1.6	Load center	c	in	mm	Fork length / 2		Fork length / 2	
	1.9	Wheelbase	WBL	in	mm	See drawing		See drawing	
Weights	2.1	Service weight (+/- 5.0%)		lbs	kg	1342	609	1316	597
	3.1	Tire type, front / rear				Polyurethane		Polyurethane	
	3.2	Tire size, front		in	mm	12 x 5	305 x 127	12 x 5	305 x 127
	3.3	Tire size, rear		in	mm	3.3 x 6.4	83 x 162	3.3 x 6.4	83 x 162
	3.5	Wheels, number front / rear (X=driven)				1x/2		1x/2	
Dimensions	4.19	Overall length	l_4	in	mm	See drawing			
	4.2.0	Length to face of forks	l_2	in	mm	37	940.9	37	940.9
	4.21	Overall width	b_1	in	mm	34.3	872	34.3	872
	4.2.2	Fork dimensions	w_3	in	mm	See drawing			
	4.3.3	Aisle width*	Ast	in	mm	98.7	2507	98.7	2507
	4.35	Outer turning radius	TR	in	mm	See drawing			
	4.4	Lift	h_3	in	mm	6.0	152	6.0	152
	4.4.1	Lift from floor		in	mm	9.25	235	9.25	235
	4.9	Height of tiller arm	h_{14}	in	mm	58.9	1495	58.9	1495
Performance	5.1	Travel speed, with load		mph	km/h	3.5	5.6	3.5	5.6
	5.1.1	Travel speed, without load		mph	km/h	3.5	5.6	3.5	5.6
	5.8	Maximum gradeability with load		%		15		10	
	5.8.1	Maximum gradeability without load		%		15		15	
	5.10	Service brake				Electric			
Drive	6.1	Drive motor		hp	kW	5.4	4.0	5.4	4.0
	6.2	Lift motor		hp	kW	3	2.2	3	2.2
	6.3	Battery compartment dimensions		in	mm	31.5 x13.5 x open	796 x 341 x open	31.5 x13.5 x open	796 x 341 x open
	6.4	Battery voltage		V		24			

* Aisle width is calculated with 48" forks and a 40" wide pallet. Add 6-8" for operating clearance.

NOTICE: Products are subject to change without notice. Our products are continuously being improved, all conditions, terms, and specifications are subject to change at any time.

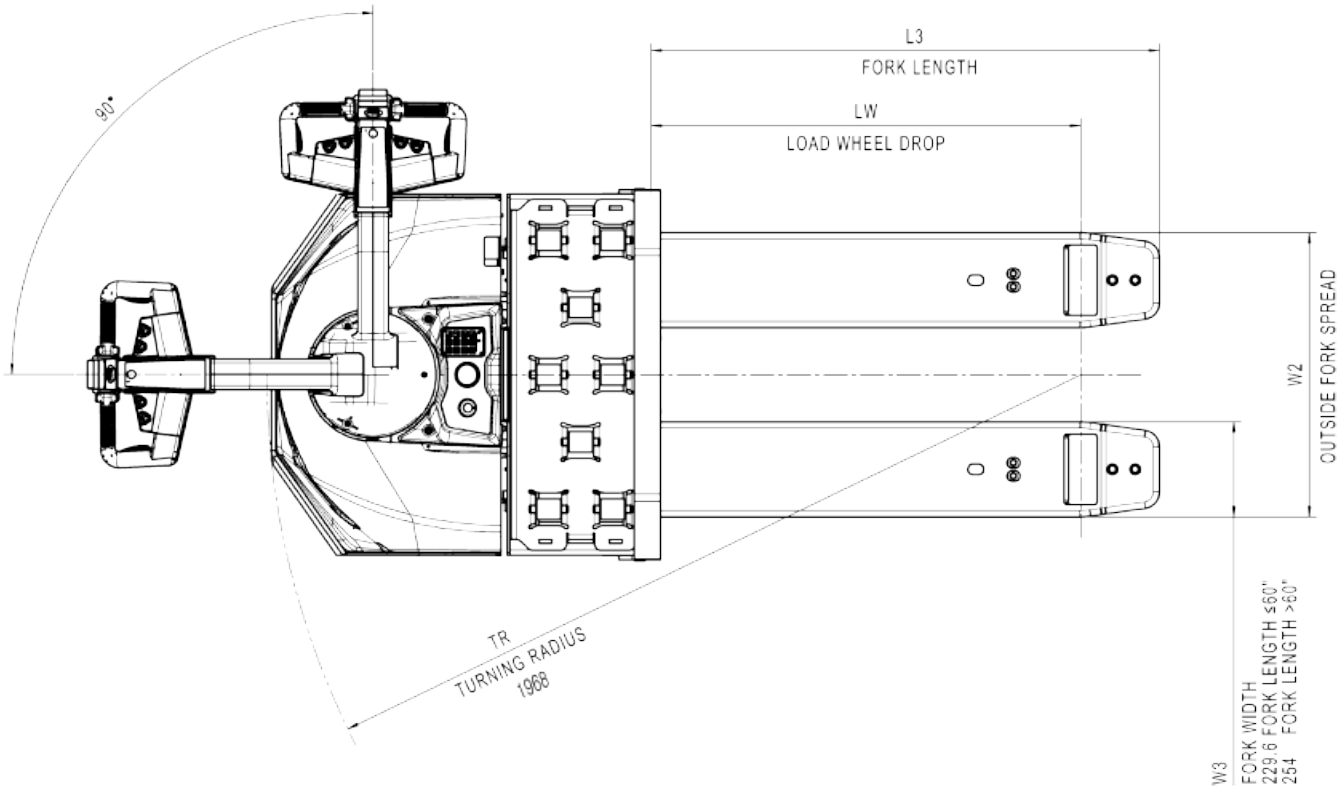

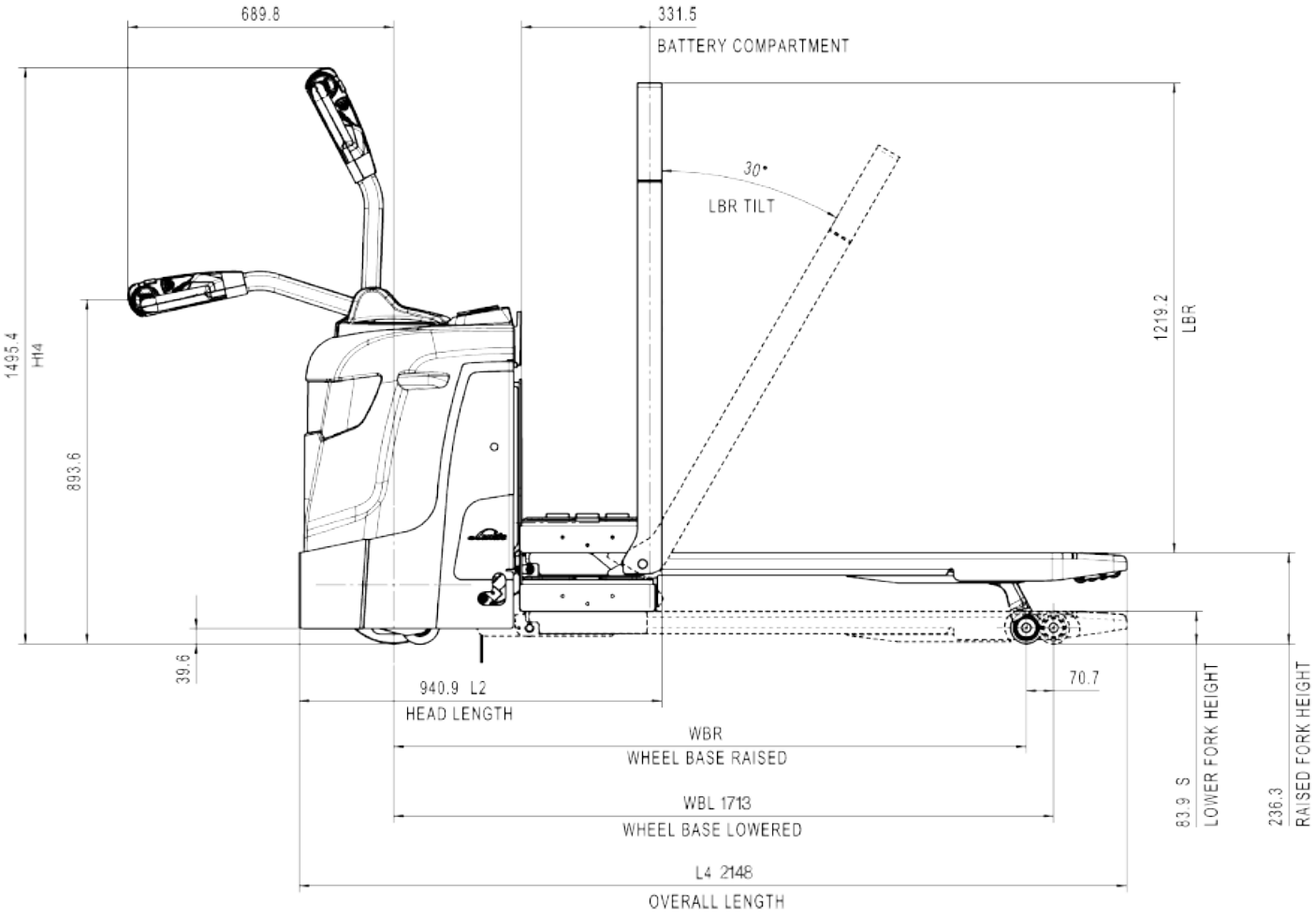

*Refer to Technical Data Chart

EWR TECHNICAL DATA

February 2020

Characteristics	1.1	Manufacturer				LINDE			
	1.2	Model designation				EWR30		EWR40	
	1.3	Power unit				Electric		Electric	
	1.4	Operation				Walk / Ride		Walk / Ride	
	1.5	Load capacity	Q	lbs	kg	6000	2722	8000	3629
	1.6	Load center	c	in	mm	Fork length / 2		Fork length / 2	
	1.9	Wheelbase	WBL	in	mm	See drawing		See drawing	
Weights	2.1	Service weight (+/- 5.0%)		lbs	kg	1457	661	1430	649
	3.1	Tire type, front / rear				Polyurethane		Polyurethane	
	3.2	Tire size, front		in	mm	12 x 5	305 x 127	12 x 5	305 x 127
	3.3	Tire size, rear		in	mm	3.3 x 6.4	83 x 162	3.3 x 6.4	83 x 162
	3.4	Caster wheel dimension		in	mm	4 x 2.5	102 x 64	4 x 2.5	102 x 64
	3.5	Wheels, number front / rear (X=driven)				1x/2		1x/2	
Dimensions	4.19	Overall length	l_4	in	mm	See drawing			
	4.2.0	Length to face of forks	l_2	in	mm	45	1142	45	1142
	4.21	Overall width	b_1	in	mm	36	916	36	916
	4.2.2	Fork dimensions	w_3	in	mm	See drawing			
	4.3.3	Aisle width*	Ast	in	mm	106.2	2698	106.2	2698
	4.35	Outer turning radius	TR	in	mm	See drawing			
	4.4	Lift	h_3	in	mm	6.0	152	6.0	152
	4.4.1	Lift from floor		in	mm	9.25	235	9.25	235
	4.9	Height of tiller arm	h_{14}	in	mm	58.9	1495	58.9	1495
Performance	5.1	Travel speed, with load		mph	km/h	5.5	8.8	5.5	8.8
	5.1.1	Travel speed, without load		mph	km/h	9.5	15.3	9.5	15.3
	5.8	Maximum gradeability with load		%		15		10	
	5.8.1	Maximum gradeability without load		%		15		15	
	5.10	Service brake				Electric			
Drive	6.1	Drive motor		hp	kW	5.4	4.0	5.4	4.0
	6.2	Lift motor		hp	kW	3	2.2	3	2.2
	6.3	Battery compartment dimensions		in		31.5 x13.5 x open		31.5 x13.5 x open	
	6.3	Battery compartment dimensions			mm	796 x 341 x open		796 x 341 x open	
	6.4	Battery voltage		V		24			

* Aisle width is calculated with 48" forks and a 40" wide pallet. Add 6-8" for operating clearance.

NOTICE: Products are subject to change without notice. Our products are continuously being improved, all conditions, terms, and specifications are subject to change at any time.

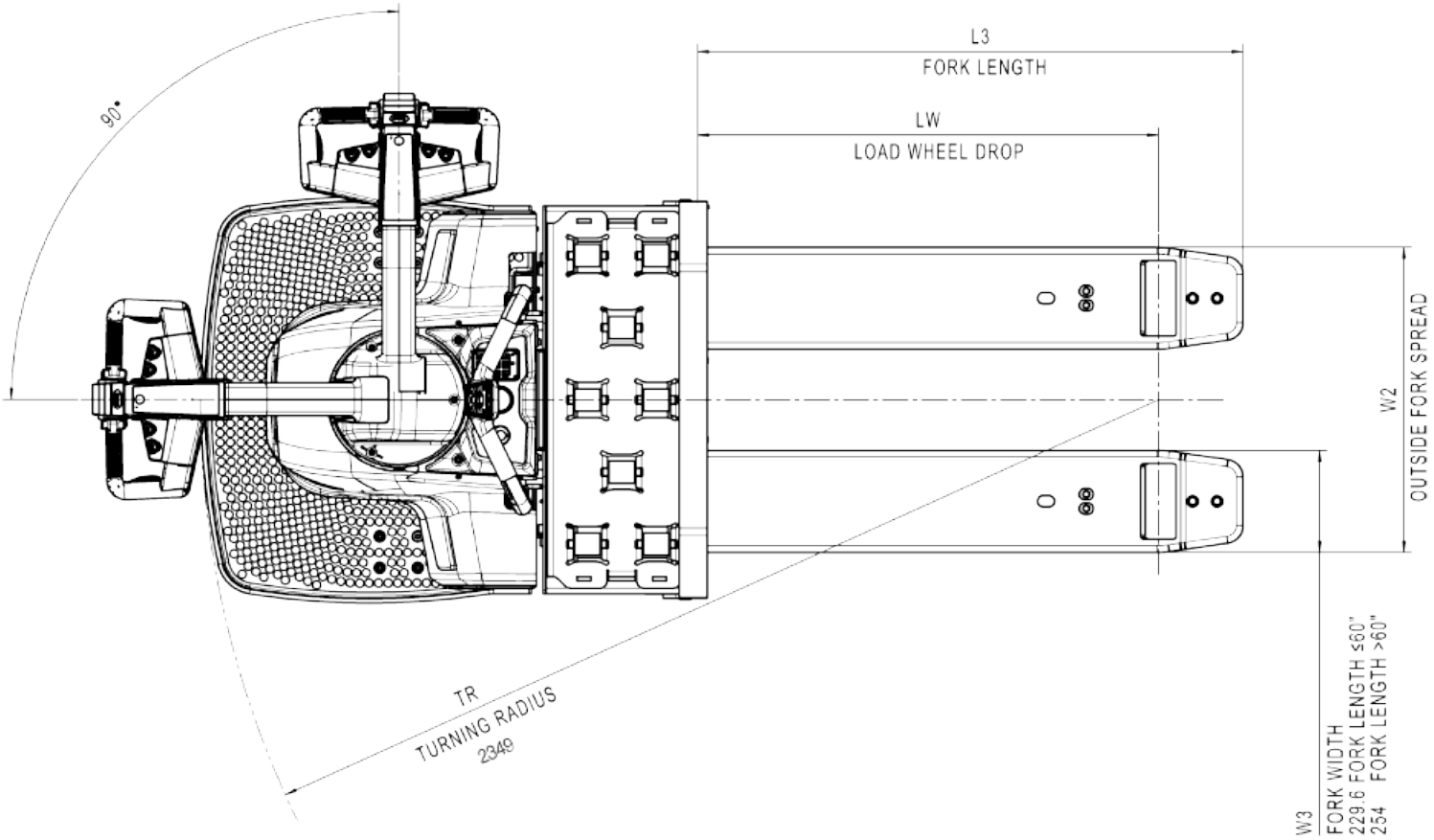

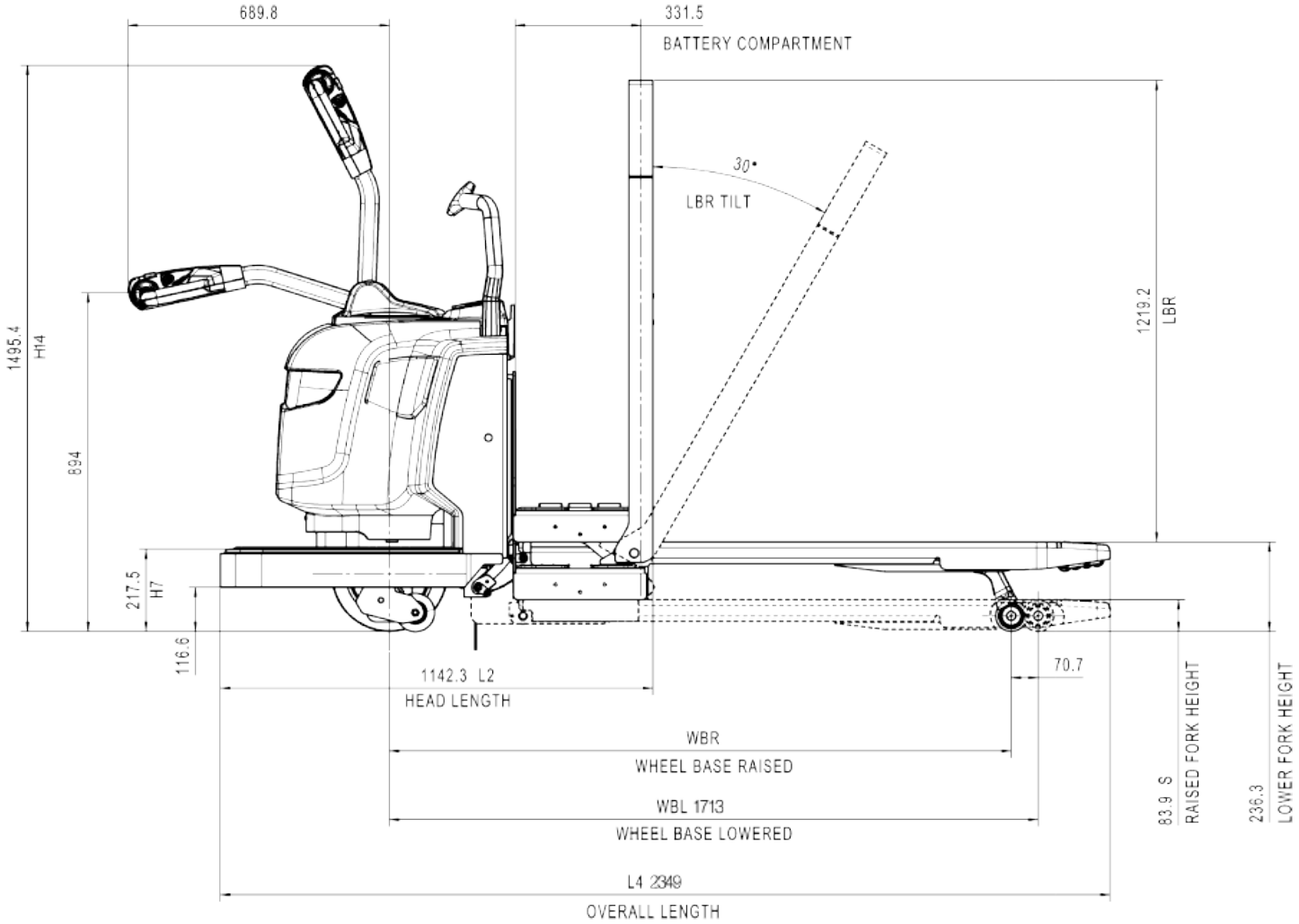

*Refer to Technical Data Chart

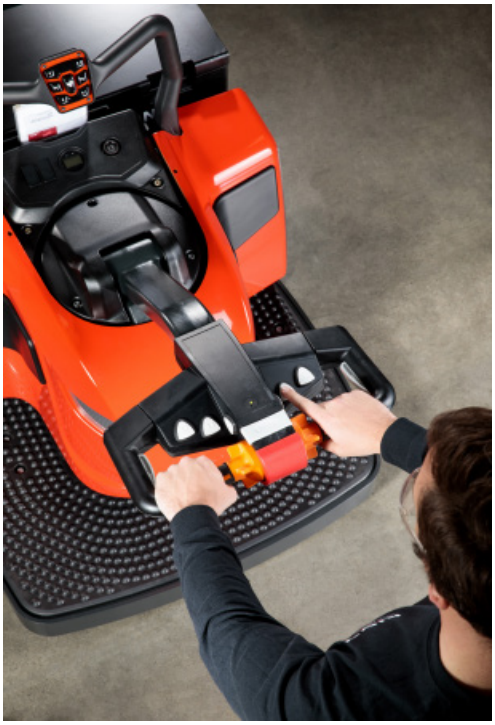

Linde Material Handling

KION NORTH AMERICA

ANSI: Standard truck meets all applicable mandatory requirements of ANSI/ITSDF B56.1 standards for powered industrial trucks.
NOTE: Performance data may vary due to motor and system efficiency tolerances. The performance depicted represents nominal values obtained under typical operating conditions. Metric dimensions are in millimeters unless otherwise specified. All metric dimensions are not direct equivalents due to rounding data. The descriptions and specifications included on this data sheet were in effect at the time of printing. KION North America Corporation reserves the right to make improvements and changes in specification or design without notice and without incurring obligation. Please check with your authorized Linde dealer for information on possible updates or revisions.

ELEVEX™
Material Handling Solutions

MONTREAL (Head office)
19151 A, Cruickshank Avenue
Baie-D'Urfé (Québec) H9X 3N9
Phone: 418 694-4223
Toll free: 1 866 421-4223
info@elevex.ca
elevex.ca

QUEBEC
1279, Paul-Émile Giroux St. Suite 200
Québec (Québec) G1C 0K9

SAGUENAY
2305, Alexis-Le-Trotteur
St. Jonquière (Québec) G7X 9H8

linde_spec_1101-02_8pg_20200207