NOBLELIFT CANADA INC.

WE PROMISE | WE DELIVER

CE ISO9001 / ISO14001

CE Certificate

FE4P25-32C

C-Series 4-Wheel Electric Cusion

- *High Performance*
- *High Mobility*
- *Highly Cost Effective*
- *Robust Design*
- *Ergonomic*
- *Easy Maintenance*
- *Low Noise*
- *Li-ion*

5000/
6500
lbs
Capacity

ELEVEX™
Material Handling Solutions

C-Series
4-Wheel Electric Cushion

COMPACT DESIGN

The Noblelift cushion electric forklift truck is small & flexible with its compact design allowing it to be used in confined indoor space and applications yet with great comfort for operators with its ergonomic design.

HIGH EFFICIENCY

- Optional different speed modes available to accomodate most demanding applications.
- Optional large led acid or Li-ion battery and regenerative breaking system increase application hours significantly with single battery charging.
- High-power oil pump motor and large displacement gear pump are applied to increase lifting and lowerign speed, and improve working efficiency.

With its compact design and small turning radius, the truck can operate in confined space.

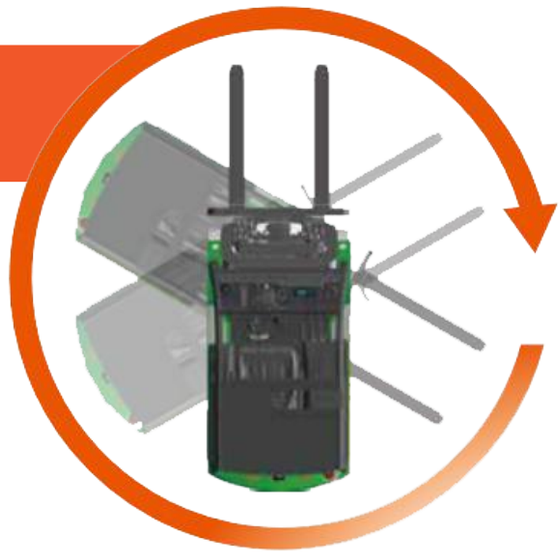

COMFORT DESIGN

- Ergonomic designed stearing wheel with adjustable angle, drive seat adjustable forward and backward, the operator can choose the best and comfortable driving position.

Advance LCD Display

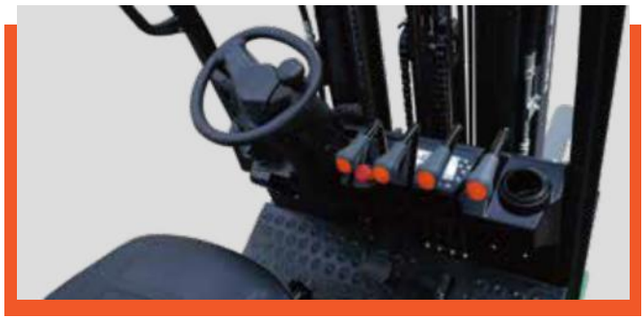

- The operator can select differen performance modes on LCD to meet different applications. The easy-to-read LCD color display provides information about speed. steer angle and travel direction, battery discharge indicator, hour meter and working mode, which allows the operator to operate easily and efficiently.

- Adjustable for operato weight, lumbar support and position, the full-suspension seat includes an ergonomic operator restraint system which helps support the operator during operation.

- Spacious foot room is provided for prolonged operator comfort during operation. The integral rubber and plastic pedal pad allows the operator to get on and off the truck comfortably and safely.

EASY MAINTENANCE

Easy-removable of side panels enables easy service and maintenance of various systems.

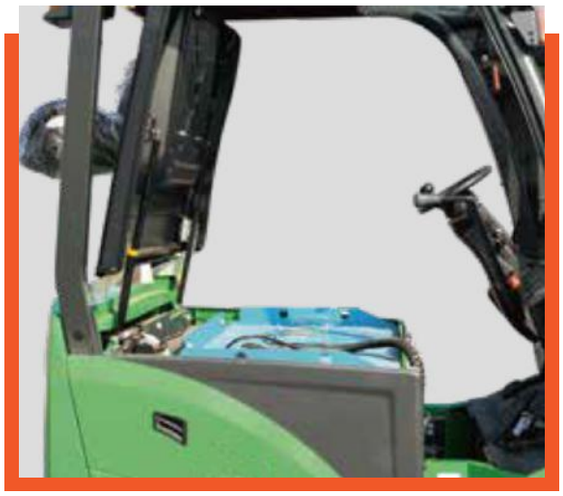

The battery compartment is equipped with a side battey removal assembly for easy removal and replacement

Standard equiped with tilt cylinder boot to protect it from the environments and best reliability.

Innovative dual-door structure, with one door at left side and right side of the truck respectively enables easy maintenance of oil pump motor, oil pump and electric control of the truck with good water proof and dust proof performance.

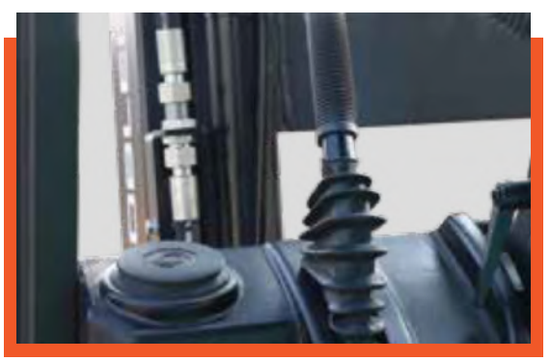

Break fluid can be added very conveniently by opening the shield cover and oil tank cover

SAFETY & RELIABILITY

Safety and reliability are always the focus of NOBLELIFT R&D when we are dedicated to supply products to our customers, Noblelift pays great attention to the details and main points to ensure the best productivity from our trucks.

Heavy duty steel chasis, axles, mast and overhead guard deliver high strength and stability for high lifting heights and heavy loads.

Intelligent buffering when descending to the ground, effectively protects the ground and cargo from damages.

Operator's safety belt restraint wearing system is standard to ensure the safety of the operator.

Equipped with LED lamps:
led rear working lights, headlights, strobe & safety blue light, bright light with low power consumption provide excellent visibility.

Comapred with other N-Series 4-wheel electric counter balance forklift, this model is smaller in size and more flexible, which is more suitable for working in confined areas.

The key electric components such as controllers, displays, main contactors are all well-known brands in the industry to ensure the best performance and reliability. Efficient control system of high-frequency MOSEFT integrated controller gurantees smooth and accurate control on running and lifting, and superior speed regulation performance, with regenerative braknig, reverse, backing, anti-slipping on slope and other functions.

Reduce speed at turningto make sure the safety of the operator and goods
from the design point of view.

OPTIONAL LETHIUM BATTERY

Fast charging with battery full charge in 2-3 hours. The intelligent high frequency charger with automobile charging technology has a working efficiency of more than 80% working efficieny of traditional low frequency charger.

Model		Standard	Optional
FE4P25C	Lion	80V/412Ah	80V/544Ah
	Lead-acid	80V/480Ah	
FE4P32C	Lion	80V/412Ah	80V/544Ah
	Lead-acid	80V/560Ah	

All lithium-ion battries are equipped buit-in battery management system (BMS) that manages all important data during charging and discharging. The management of the battery by BMS can ensure the safety of the battery throughout its lifecycle. Lithium-ion batteries have been certified for safe transportation (by air and sea) ans operating standards. BMS communicates with the truck management system through CAN. CAN protocol CAN monitor the battery and diagnose and repair the battery through specific software.

FAST CHARGING

The unique fast charging feature of lithium batteries makes them and ideal choice for multi-shift operation. On comparison with lead-acid batteries, the lithium batteries show greater performance as they can be charge between operations and during breaks, through the support of opportunity charging, the effective working time of equipment with lithium battery can be prolonged witout necessity to replace the battery. Additionaly, the opportunity charging has no effect on lithium battery, there is no memory effect and fast consecutive capacity reduction as it is the case for lead-acid batteries.

ENVIRONMENT-FRIENDLY

Lithium batteries are completely sealed, there is no eveporation of electrolyte, forming of explosive gases and chemical smell during charging process. Therefore, the lithium batteries are ideal for use in applications with environmental concerns, such as food processing, checmical and pharmaceutical industries.

SAFETY

The lithium battery is using LiFePO4 chemistry (LFP), which is stable and safe. Each battery is equipped with integrated Battery Management System (BMS), which controls various parameters of the cells during charging operations making the use of lithium batteries safe, reliable and long lasting.

Mast Table FE4P25C

Designation	Lift height h3 (mm)	Free lift h2 (mm)	Closed mast height h1 (mm)	Extended mast height h4 (mm)	Tilt forward/ backward α/β(°)	Capacity table (kg) C=24 without side shift single pneumatic tyres FE4P25C
Two-stage ZT	98.4 (2500)	5.3 (135)	71.7 (1820)	135.6 (3445)	6/8	5000 (2270)
	118.1 (3000)	5.3 (135)	81.5 (2070)	155.3(3445)	6/8	5000 (2270)
	129.9 (3300)	5.3 (135)	87.4 (2220)	167.1 (3945)	6/8	5000 (2270)
	137.8 (3500)	5.3 (135)	91.3 (2320)	175.0 (4445)	6/8	5000 (2270)
	145.7 (3700)	5.3 (135)	95.3 (2420)	182.9 (4645)	6/8	5000 (2270)
	157.5 (4000)	5.3 (135)	103.1 (2620)	194.7 (4945)	6/6	5000 (2270)
	169.3 (4300)	5.3 (135)	109.1 (2770)	206.5 (5245)	6/6	5000 (2270)
	177.2 (4500)	5.3 (135)	113.0 (2870)	214.4 (5445)	6/6	4910 (2230)
	196.9 (5000)	5.3 (135)	122.8 (3120)	234.1 (5945)	6/6	4580 (2080)
Two-stage ZZ	98.4 (2500)	34.4 (875)	71.7 (1820)	135.6 (3445)	6/8	5000 (2270)
	118.1 (3000)	44.3 (1125)	81.5 (2070)	155.3 (3945)	6/8	5000 (2270)
	129.9 (3300)	50.2 (1275)	87.4 (2220)	167.1 (4245)	6/8	5000 (2270)
	137.8 (3500)	54.1 (1375)	91.3 (2320)	175.0 (4445)	6/8	5000 (2270)
	145.7 (3700)	58.1 (1475)	95.3 (2420)	182.9 (4645)	6/8	5000 (2270)
	157.5 (4000)	65.9 (1675)	103.1 (2620)	194.7 (4945)	6/6	5000 (2270)
Three-stage DZ	157.5 (4000)	36.8 (935)	74.08 (1880)	194.7 (4945)	6/6	5000 (2270)
	171.3 (4350)	41.7 (1060)	78.9 (2005)	208.8 (5295)	6/6	5000 (2270)
	177.2 (4500)	43.7 (1110)	80.9 (2055)	241.4 (5445)	6/6	4890 (2220)
	189.0 (4800)	47.6 (1210)	84.8 (2155)	226.2 (5745)	6/6	4740 (2150)
	196.9 (5000)	50.6 (1285)	87.8 (2230)	234.1 (5945)	6/6	4540 (2060)
	216.5 (5500)	57.5 (1460)	94.7 (2405)	253.7 (6445)	6/6	4050 (1840)
	236.2 (6000)	65.4 (1660)	102.6 (2605)	273.4 (6945)	6/6	3520 (1600)
Four-stage DZ	240.2 (6100)	46.9 (1190)	84.1 (2135)	277.4 (7045)	3/5	3520 (1600)
	259.8 (6600)	51.8 (1315)	89.0 (2260)	297.0 (7545)	3/5	2970 (1350)
	275.6 (7000)	58.9 (1495)	96.1 (2440)	312.8 (7945)	3/5	1760 (800)

Free lifting height without stop shelf + 10.5(266mm)

Mast Table FE4P32C

Designation	Lift height h3 (mm)	Free lift h2 (mm)	Closed mast height h1 (mm)	Extended mast height h4 (mm)	Tilt forward/ backward α/β(°)	Capacity table (kg) C=24 without side shift single pneumatic tyres FE4P32C
Two-stage ZT	98.4 (2500)	5.3 (135)	71.7 (1820)	142.8 (3628)	6/8	6500 (2950)
	118.1 (3000)	5.3 (135)	81.5 (2070)	162.5 (4128)	6/8	6500 (2950)
	129.9 (3300)	5.3 (135)	87.4 (2220)	174.3 (4428)	6/8	6500 (2950)
	137.8 (3500)	5.3 (135)	91.3 (2320)	182.2 (4628)	6/8	6500 (2950)
	145.7 (3700)	5.3 (135)	95.3 (2420)	190.1 (4828)	6/8	6500 (2950)

Two-stage ZT	157.5 (4000)	5.3 (135)	103.1 (2620)	201.9 (5128)	6/6	6500 (2950)
	169.3 (4300)	5.3 (135)	109.1 (2770)	213.7 (5428)	6/6	6410 (2910)
	177.2 (4500)	5.3 (135)	113.0 (2870)	221.6 (5628)	6/6	6350 (2880)
	196.9 (5000)	5.3 (135)	122.8 (3120)	241.3 (6128)	6/6	6050 (2750)
Two-stage ZZ	98.4 (2500)	29.0 (737)	71.7 (1820)	142.8 (3628)	6/8	6500 (2950)
	118.1 (3000)	38.9 (987)	81.5 (2070)	162.5 (4128)	6/8	6500 (2950)
	129.9 (3300)	44.8 (1137)	87.4 (2220)	174.3 (4428)	6/8	6500 (2950)
	137.8 (3500)	48.7 (1237)	91.3 (2320)	182.2 (4628)	6/8	6500 (2950)
	145.7 (3700)	52.6 (1337)	95.3 (2420)	190.1 (4828)	6/8	6500 (2950)
	157.5 (4000)	60.5 (1537)	103.1 (2620)	201.9 (5128)	6/6	6500 (2950)
Three-stage DZ	157.5 (4000)	33.9 (862)	76.6 (1945)	201.9 (5128)	6/6	6500 (2950)
	171.3 (4350)	38.9 (987)	81.58 (2070)	215.7 (5478)	6/6	6390 (2900)
	177.2 (4500)	40.8 (1037)	83.5 (2120)	221.6 (5628)	6/6	6300 (2860)
	189.0 (4800)	44.8 (1137)	87.4 (2220)	233.4 (5928)	6/6	6190 (2810)
	196.9 (5000)	50.4 (1280)	93.0 (2363)	241.3 (6128)	6/6	6040 (2740)
	216.5 (5500)	59.6 (1514)	102.2 (2597)	260.9 (6628)	6/6	5640 (2560)
	236.2 (6000)	68.8 (1747)	111.4 (2830)	280.6 (7128)	6/6	4180 (1900)
Four-stage DZ	240.2 (6100)	41.4 (1052)	84.1 (2135)	284.6 (7228)	3/6	4180 (1900)
	259.8 (6600)	46.3 (1177)	89.0 (2260)	304.3 (7728)	3/6	3300 (1500)
	275.6 (7000)	53.4 (1357)	96.1 (2440)	320.0 (8128)	3/6	2090 (950)

Free/Four lifting height without stop shelf + 17.7(450mm)

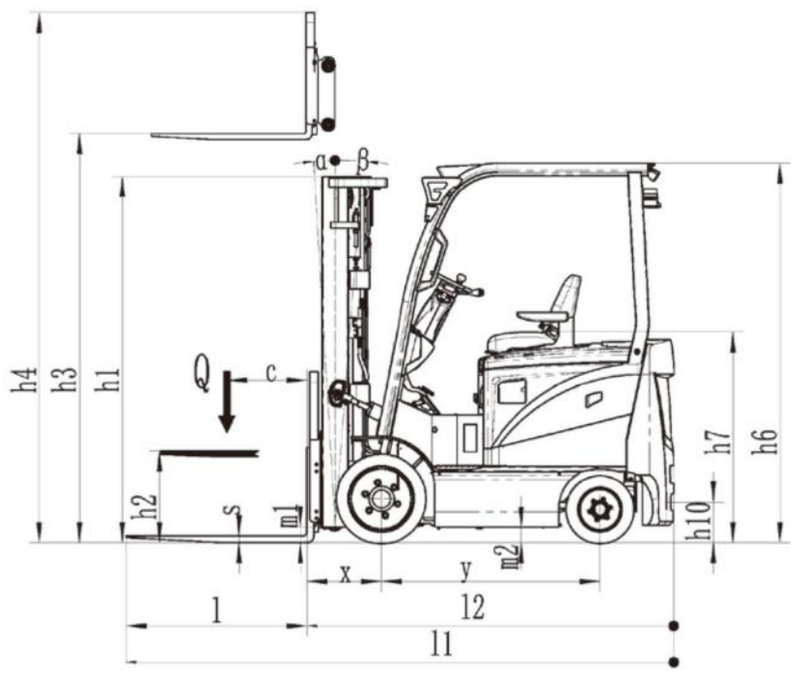

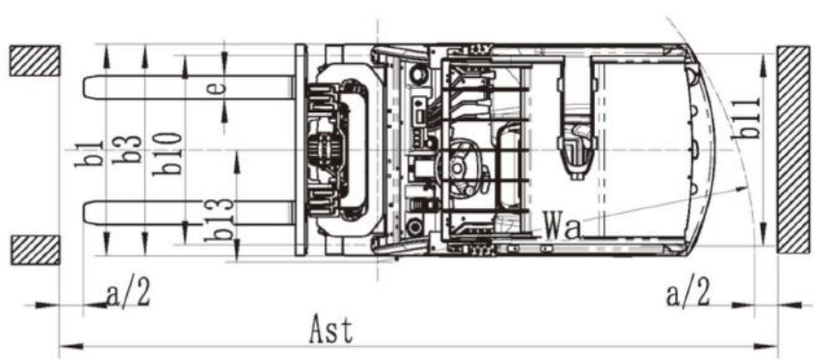

FE4P25-32C | Battery Balance Weight Type Forklift

Identification	1.1	Manufacture(abbreviation)			Noblellift	Noblellift
	1.2	Manufacturer's type designation			FE4P25C	FE4P32C
	1.3	Drive: Electric(battery or mains), diesel, patrol, gas, manual			electric	electric
	1.4	Type of operation (hand, pedestrian, standing, seated, order picker			seated	seated
	1.5	Load capacity/rated load	Q	lb(kg)	5000 (2270)	6500 (2950)
	1.6	Load centre distance	C	in(mm)	24(600)	24(600)
	1.8	Load distance, centre of drive axle to fork	x	in(mm)	17.3(440)	17.5(445)
	1.9	Wheelbase	y	in(mm)	51(1295)	55(1395)
Weights	2.1	Service weight incl. battery (see line 6.5)	kg	lb(kg)	9405(4350)	10175(4850)
	2.2	Axle loading, laden front/rear	kg	lb(kg)	12705/2200(5850/1000)	14245/2530(6550/1300)
	2.3	Axle loading, unladen front/rear	kg	lb(kg)	3465/5940(1650/2700)	3905/6270(1800/3050)
Wheels, Chasis	3.1	Type: Solid rubber, super elastic, pneumatic, polyurethane			Solid rubber	Solid rubber
	3.2	Tyre size front			21x7-15	21x8-15
	3.3	Tyre size rear			16x6-10.5	16x6-10.5
	3.5	Wheel, number front/rear (x=driven wheels)			2x/2	2x/2
	3.6	Track, width front	b10	in(mm)	37.7(882)	35.5(902)
	3.7	Track, width rear	b11	in(mm)	36.3(922)	36.3(922)
Basic Dimensions	4.1	Mast/fork carriage tilt forward/backward	α/ß	°	6/8	6/8
	4.2	Lowered mast height	h1	in(mm)	85.4(2170)	85.4(2170)
	4.3	Free lift	h2	in(mm)	4.7(120)	4.7(120)
	4.4	Lift height	h3	in(mm)	118.1(3000)	118.1(3000)
	4.5	Extended mast height	h4	in(mm)	156.6(3977)	160.6(4079)
	4.7	Overhead load guard height	h6	in(mm)	88.6(2280)	88.6(2280)
	4.8	Seat height/standing height	h7	in(mm)	49.2(1250)	49.2(1250)
	4.12	Coupling height	h10	in(mm)	11.6(295)	11.6(295)
	4.19	Overall lenght	11	in(mm)	127(3225)	133.3(3385)
	4.20	Lenght to face of forks	12	in(mm)	84.8(2155)	91.1(2315)
	4.21	Overall width	b1	in(mm)	42.5(1080)	44.7(1135)
	4.22	Fork dimensions	s/e/l	in(mm)	1.6/4.7/42.1(40/120/1070)	1.6/4.9/42.1(45/125/1070)
	4.24	Fork carriage width	b3	in(mm)	40.9(1040)	43.3(1100)
	4.31	Ground clearance, laden, under mast	m1	in(mm)	4.3(110)	4.3(110)
	4.32	Ground clearance, centre of wheelbase	m2	in(mm)	4.7(120)	4.7(120)
	4.33	Aisle width of pallets 1000x1200 lengthways	AST	in(mm)	141.3(3590)	145.5(3755)
	4.34	Aisle width of pallets 800x1200 lengthways	AST	in(mm)	149.2(3790)	153.3(3955)
	4.35	Turning radius	Wa	in(mm)	76.8(1950)	80.7(2050)

C Series 4-Wheel Electric Cushion

Performance Data	5.1	Travel speed, laden/unladen		mph (km/h)	9.3/9.3(15/15)	9.3/9.3(15/15)
	5.2	Lift speed laden/unladen		mph (km/h)	67/79(340/400)	67/79(340/400)
	5.3	Lowering speed, laden/unladen		mph (km/h)	<118(<0.6)	<118(<0.6)
	5.5	Drawbar pull, laden/unladen S2 60 min		lbf (N)	7260/5060(3300/2300)	8360/6160(3800/2800)
	5.7	Max , Gradient performance, laden/unladen S2 5 min		%	15/20	15/20
	5.10	Service brake			Hydraulic	Hydraulic
E-Motor	6.1	Drive motor rating S2 60 min		hp(kw)	16.1(12)	16.1(12)
	6.2	Lift motor rating at S3 15%		hp(kw)	21.4(16)	21.4(16)
	6.3	Battery standard			Lion/lead/acid	Lion/lead/acid
	6.4	Battery voltage, nominal capacity K5		V/Ah	Lion 76.8/412(76.8/544) Lead acid (80/480)	Lion 76.8/412(76.8/544) Lead acid (80/560)
	6.5	Battery weight		lb(kg)	Lion 704(320) Lead acid 2794(1270)	Lion 704(320) Lead acid 3212(1460)
		Battery dimensions L/W/H		in(mm)	Lion 38.6/24.8/23.8 (980/630/605) Lead-acid 38.6/30.9/23.8 (980/785/610)	Lion 38.6/24.8/23.8 (980/630/605) Lead-acid 38.6/35.3/23.8 (980/785/610)
Other Details	8.1	Type of drive control			AC	AC
	8.2	Operating pressure for attachments		psi (bar)	2538(175)	2538(175)
	8.3	Oil volume for attachments		1/min	570(36)	570(36)
	8.4	Sound level at driver's ear according to EN 12 053		dB(A)	73	73

NOBLELIFT CANADA INC.

ELEVEX™ Material Handling Solutions

MONTREAL (Head office)
19151 A, Cruickshank Avenue
Baie-D'Urfé (Québec) H9X 3N9
Phone: 418 694-4223
Toll free: 1 866 421-4223
info@elevex.ca
elevex.ca

QUEBEC
1279, Paul-Émile Giroux St. Suite 200
Québec (Québec) G1C 0K9

SAGUENAY
2305, Alexis-Le-Trotteur St.
Jonquière (Québec) G7X 9H8