PRODUCT **SPECIFICATIONS**

# FORKLIFT TRUCK | SCP100A

## STANDARD FEATURES

- Powered tilting cab for service
- Backup camera with object detection system
- Enclosed cab with automatic climate control and with a high back
- Separate hydraulic and brake oil systems
- Powerful Cummins engine

**22,000 lbs**
Rated Load Capacity

**34,800 lbs**
Weight Without Load

**106"**
Wheelbase

**Cummins Diesel**
Engine

## DIMENSIONS

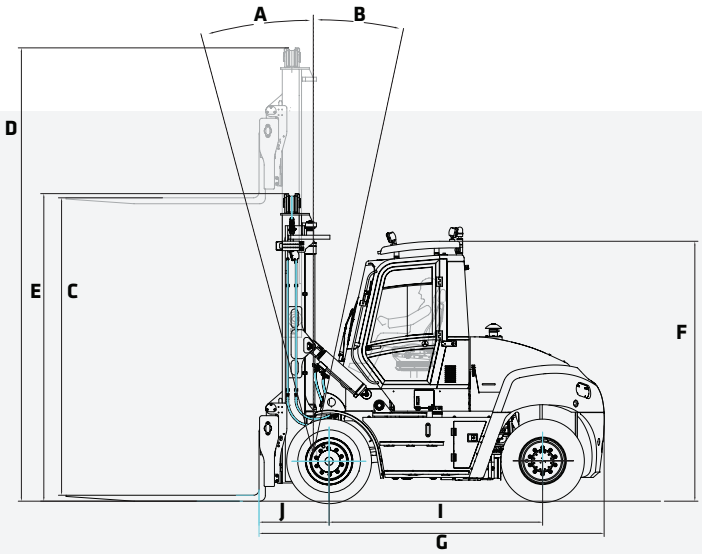


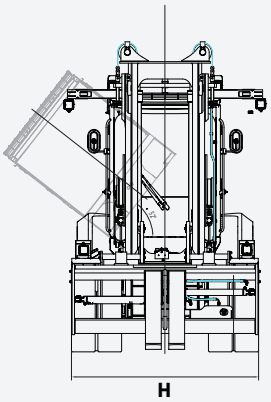


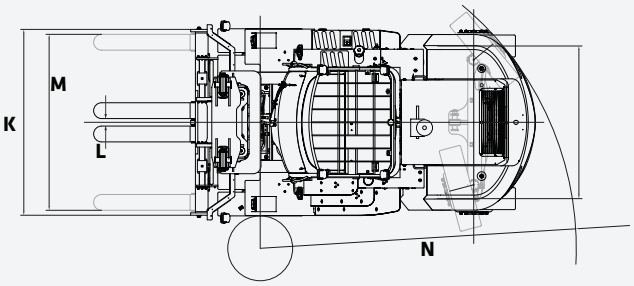


| DIMENSIONS | | | |
|---|---|---|---|
| **MAST** | | | |
| A | Forward Tilt | 12° | |
| B | Back Tilt | 15° | |
| C | Lift Height | 148" | 3 760 mm |
| D | Height Extended | 226" | 5 732 mm |
| E | Height Lowered | 153" | 3 890 mm |
| **OVERALL** | | | |
| F | Cab height | 137" | 3 470 mm |
| G | Length to Load Face | 172" | 4 364 mm |
| H | Width | 93" | 2 370 mm |
| I | Wheelbase | 106" | 2 700 mm |
| J | Load Distance | 35" | 886 mm |
| **FORK** | | | |
| | Thickness | 3" | 75 mm |
| | Width | 8" | 200 mm |
| | Length | 96" | 2 440 mm |
| **CARRIAGE** | | | |
| K | Width | 93" | 2 370 mm |
| **FORK SPREAD** | | | |
| L | In-In Minimum | 3.7" | 95 mm |
| M | Out-Out Maximum | 89" | 2 255 mm |
| **GROUND CLEARANCE** | | | |
| | Minimum Ground Clearance | 10.4" | 264 mm |
| **AISLE WIDTH** | | | |
| | With Load Length | 296" | 7 526 mm |
| **TURNING RADIUS** | | | |
| N | Outside | 157" | 4 000 mm |

In the interest of continual equipment development, SANY Canada Ltd. reserves the right to change these specifications at any time without prior notification.
©2023 SANY Canada Ltd.

## STANDARD AND OPTIONAL EQUIPMENT

**s** = standard / **o** = optional

| SCP100A | ENGINE |
|---|---|
| s | QSB 4.5l Cummins Diesel with 160HP @ 2300rpm |
| s | Tier 4 Final EPA Emissions Compliant |
| s | High Intake, Long Life Air Filter w/ Safety Element |
| s | Fuel Filter with Water Separator |
| s | Variable Geometry Turbocharger |
| s | 500-Hr Engine-Oil-Change Interval |
| s | Electronic Controlled |
| s | 24V, 70A Alternator |
| | **DRIVETRAIN** |
| s | Dana TE-10 Transmission |
| s | 3 FWD & 3 REV gears |
| s | Kessler D61 Drive Axle |
| s | Heavy Duty Wet Disc Brakes |
| s | Electronically Actuated Parking Brake |
| s | 6 x 10.00-20 Pneumatic Tires |
| | **MAST** |
| s | Duplex Mast, MFH 148", OALH 153", EXT 226" |
| o | Duplex Mast, MFH 148", OALH 143", EXT 216" |
| o | Duplex Mast, MFH 196", OALH 177", EXT 274" |
| s | Apron Type Carriage |
| s | Independent Fork Positioner |
| s | Side Shift Carriage |
| s | 96" x 7.87" x 2.95" Pin Type Forks |
| | **ACCESSORIES** |
| o | Reverse Camera w/ 7" Color Display |
| s | Rear Object Detection Sensor up to 10" |
| s | Common Greasing Points for Steer |
| s | Automatic Engine Fire Extinguisher |
| s | Locking Fuel Cap |
| o | Travel Speed Limiter |
| o | Integrated Tire Pressure Monitoring System |
| o | Extreme Cold Climate Package (Fuel, Engine and Hydraulics) |
| o | Customized Colors or Labels |
| s | Lockable Battery Disconnect Switch |
| o | Steer Wheel Lug Nut Protection |
| s | Rear Lifting Eyes |

In the interest of continual equipment development, SANY Canada Ltd. reserves the right to change these specifications at any time without prior notification.
©2023 SANY Canada Ltd.

## STANDARD AND OPTIONAL EQUIPMENT

**s** = standard / **o** = optional

| SCP100A | OPERATOR'S STATION |
|---|---|
| s | High Visibility Enclosed Cabin w/ Curved Glass |
| o | Grammer Air Suspension Cloth Seat |
| s | Climate Control with A/C and Heat |
| s | Ergonomic Multifunction Joystick |
| o | Individual Hydraulic Control Levers |
| s | Telescoping and Tilting Steering Column |
| s | Steering Wheel Spinner Knob |
| o | AM/FM Radio with 2 Speakers and USB Connectivity |
| s | Front, Rear and Top wiper |
| s | Top Retractable Sun Shade |
| s | 12V/24V Power Supply |
| s | Push Button Applied Park Brake |
| o | Reading Light |
| s | Exterior Cabin Mounted Mirrors |
| s | Powered Tilting Cabin for Ease of Maintenance |
| | **ELECTRICAL** |
| s | 2 Front Fender Mounted LED Lights |
| s | 2 Front Cab Mounted LED Lights |
| s | 2 Rear Cab Mounted LED Lights |
| s | 2 Mast Mounted LED Working Lights |
| o | Indicator and Hazard lights |
| o | Rotating Amber Beacon |
| o | Additional LED Lights |

In the interest of continual equipment development, SANY Canada Ltd. reserves the right to change these specifications at any time without prior notification.
©2023 SANY Canada Ltd.

# PRODUCT **SPECIFICATIONS FORKLIFT TRUCKS** ||| **SCP100A**

## WORKING RANGE

### SPECIFICATIONS

| | | |
|---|---|---|
| **GENERAL** | | |
| Rated Load Capacity | 22,000 lbs | 10 000 kg |
| Load Center | 24" | 610 mm |
| Load Distance | 35" | 886 mm |
| Wheelbase | 106" | 2 700 mm |
| Hydraulic Tank Capacity | 33 gal | 125 l |
| Fuel Tank Capacity | 43 gal | 164 l |
| **WEIGHTS** | | |
| Total Truck Weight without Load | 34,800 lbs | 15 800 kg |
| Axle Loading with Load | | |
| Front | 51,400 lbs | 23 300 kg |
| Rear | 4,000 lbs | 1 800 kg |
| Axle Loading without Load | | |
| Front | 17,200 lbs | 7 800 kg |
| Rear | 17,600 lbs | 8 000 kg |
| **WHEELS** | | |
| Tire Type | Pneumatic | |
| Tire Size | | |
| Drive | 10.00-20 16PR | |
| Steer | 10.00-20 16PR | |

### POWERTRAIN

| | | |
|---|---|---|
| **ENGINE** | | |
| Type | Cummins Diesel | |
| Output | | |
| Rated | 160 hp | 119 kW |
| Governed Speed | 2,300 rpm | |
| Cylinders | | |
| Number | 4 | |
| Disp | 4.5 l | |
| Turbocharger | Water-cooled variable geometry | |
| **ALTERNATOR** | | |
| Amps | 24V | 70A |
| Drive Axle | Kessler D-61 | |
| Transmission | Dana TE10 | |
| **GEARS** | | |
| Forward | 3 | |
| Reverse | 3 | |
| **BATTERY** | | |
| Capacity | 2 x 12 V 120 Ah CCA | |
| **BRAKES** | | |
| Service | Wet Disc | |
| Parking | Dry Disc | |
| **TANK CAPACITY** | | |
| DEF | 5 gal | 19 l |

## LIFTING PERFORMANCE

### PERFORMANCE

| | | |
|---|---|---|
| **SPEED** | | |
| Travel | | |
| With Load | 18.6 mph | 30 km/h |
| Without Load | 19.2 mph | 31 km/h |
| Lifting | | |
| With Load | 79 ft/min | 0.40 m/s |
| Without Load | 89 ft/min | 0.45 m/s |
| Lowering | | |
| With Load | 98 ft/min | 0.50 m/s |
| Without Load | 94 ft/min | 0.48 m/s |
| **DRAWBAR** | | |
| Pull-Max | 23,200 lbf | 103 kN |
| **GRADEABILITY @ 1 MPH (1.6 KM/H)** | | |
| With Load | 35% | |

### MAST

| | | |
|---|---|---|
| Mast Type | Duplex w/o Freelift | |
| *Height Maximum | 148" | 3 760 mm |
| *OALH | 153" | 3 890 mm |
| *Extended | 226" | 5 740 mm |
| Fork Type | Pin | |
| Fork Size | 96" x 8" x 3" | |
| Carriage Type | Apron | |

* All imperial numbers have been rounded to the nearest whole number.

In the interest of continual equipment development, SANY Canada Ltd. reserves the right to change these specifications at any time without prior notification.

ELEVEXtreme SANY

**MONTREAL (Head office)**
19151 A, Cruickshank Avenue
Baie-D'Urfé (Québec) H9X 3N9

Phone: 418 694-4223
Toll free: 1 866 421-4223
**info@elevex.ca**

**QUEBEC**
1279, Paul-Émile Giroux St. Suite 200
Québec (Québec) G1C 0K9

**SAGUENAY**
2305, Alexis-Le-Trotteur St.
Jonquière (Québec) G7X 9H8

**elevex.ca**