PRODUCT **SPECIFICATIONS**

FORKLIFT TRUCK | SCP130A

STANDARD FEATURES

- Powered tilting cab for service
- Backup camera with object detection system
- Enclosed cab with automatic climate control and with a high back
- Separate hydraulic and brake oil systems
- Powerful Cummins engine

28,600 lbs
Rated Load Capacity

38,600 lbs
Weight Without Load

114"
Wheelbase

Cummins Diesel
Engine

DIMENSIONS

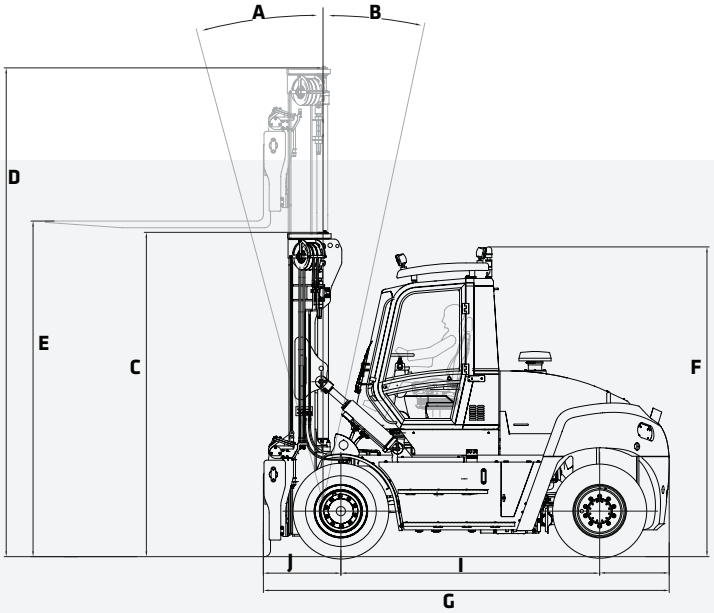

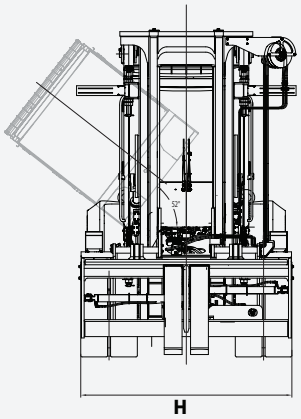

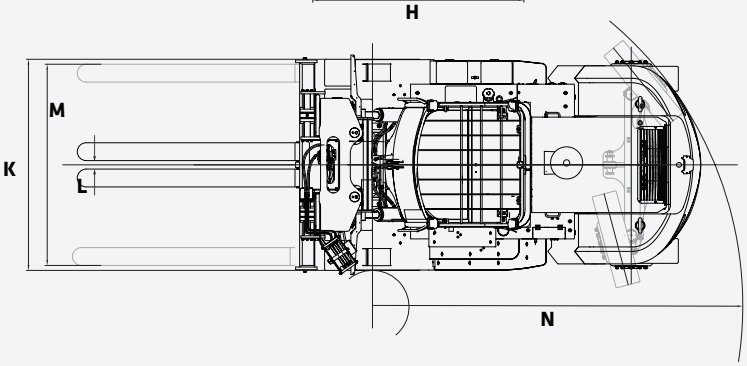

DIMENSIONS			
MAST			
A	Forward Tilt	12°	
B	Back Tilt	15°	
C	Height Lowered	143"	3 635 mm
D	Height Extended	216"	5 480 mm
E	Lift Height	148"	3 760 mm
OVERALL			
F	Cab height	137"	3 470 mm
G	Length to Load Face	179"	4 550 mm
H	Width	93"	2 370 mm
I	Wheelbase	114"	2 900 mm
J	Load Distance	34"	870 mm
FORK			
	Thickness	3"	75 mm
	Width	8"	200 mm
	Length	96"	2 440 mm
CARRIAGE			
K	Width	93"	2 370 mm
FORK SPREAD			
L	In-In Minimum	3.7"	95 mm
M	Out-Out Maximum	89"	2 255 mm
GROUND CLEARANCE			
	Minimum Ground Clearance	10.4"	264 mm
AISLE WIDTH			
	With Load Length	302"	7 660 mm
TURNING RADIUS			
N	Outside	163"	4 150 mm

In the interest of continual equipment development, SANY Canada Ltd. reserves the right to change these specifications at any time without prior notification.
©2023 SANY Canada Ltd.

STANDARD AND OPTIONAL EQUIPMENT

s = standard / **o** = optional

SCP130A	ENGINE
s	QSB 4.5l Cummins Diesel with 160HP @ 2300rpm
s	Tier 4 Final EPA Emissions Compliant
s	High Intake, Long Life Air Filter w/ Safety Element
s	Fuel Filter with Water Separator
s	Variable Geometry Turbocharger
s	500-Hr Engine-Oil-Change Interval
s	Electronic Controlled
s	24V, 70A Alternator
	DRIVETRAIN
s	Dana TE-10 Transmission
s	3 FWD & 3 REV gears
s	Kessler D61 Drive Axle
s	Heavy Duty Wet Disc Brakes
s	Electronically Actuated Parking Brake
s	6 x 10.00-20 Pneumatic Tires
	MAST
s	Duplex Mast, MFH 148", OALH 153", EXT 226"
o	Duplex Mast, MFH 148", OALH 143", EXT 216"
o	Duplex Mast, MFH 196", OALH 177", EXT 274"
s	Apron Type Carriage
s	Independent Fork Positioner
s	Side Shift Carriage
s	96" x 7.87" x 2.95" Pin Type Forks
	ACCESSORIES
o	Reverse Camera w/ 7" Color Display
s	Rear Object Detection Sensor up to 10"
s	Common Greasing Points for Steer Axle and Mast
s	Automatic Engine Fire Extinguisher
s	Locking Fuel Cap
o	Travel Speed Limiter
o	Integrated Tire Pressure Monitoring System
o	Extreme Cold Climate Package (Fuel, Engine and Hydraulics)
o	Customized Colors or Labels
s	Lockable Battery Disconnect Switch
o	Steer Wheel Lug Nut Protection
s	Rear Lifting Eyes

In the interest of continual equipment development, SANY Canada Ltd. reserves the right to change these specifications at any time without prior notification.
©2023 SANY Canada Ltd.

STANDARD AND OPTIONAL EQUIPMENT

s = standard / **o** = optional

SCP130A	OPERATOR'S STATION
s	High Visibility Enclosed Cabin w/ Curved Glass
o	Grammer Air Suspension Cloth Seat
s	Climate Control with A/C and Heat
s	Ergonomic Multifunction Joystick
o	Individual Hydraulic Control Levers
s	Telescoping and Tilting Steering Column
s	Steering Wheel Spinner Knob
o	AM/FM Radio with 2 Speakers and USB Connectivity
s	Front, Rear and Top wiper
s	Top Retractable Sun Shade
s	12V/24V Power Supply
s	Push Button Applied Park Brake
o	Reading Light
s	Exterior Cabin Mounted Mirrors
s	Powered Tilting Cabin for Ease of Maintenance
	ELECTRICAL
s	2 Front Fender Mounted LED Lights
s	2 Front Cab Mounted LED Lights
s	2 Rear Cab Mounted LED Lights
s	2 Mast Mounted LED Working Lights
o	Indicator and Hazard lights
o	Rotating Amber Beacon
o	Additional LED Lights

In the interest of continual equipment development, SANY Canada Ltd. reserves the right to change these specifications at any time without prior notification.
©2023 SANY Canada Ltd.

PRODUCT **SPECIFICATIONS FORKLIFT TRUCKS** ||| **SCP130A**

WORKING RANGE

SPECIFICATIONS

GENERAL		
Rated Load Capacity	28,600 lbs	13 000 kg
Load Center	24"	600 mm
Load Distance	34"	870 mm
Wheelbase	114"	2 900 mm
Hydraulic Tank Capacity	45 gal	170 l
Fuel Tank Capacity	50 gal	190 l
WEIGHTS		
Total Truck Weight without Load	38,600 lbs	17 500 kg
Axle Loading with Load		
Front	60,800 lbs	27 600 kg
Rear	4,900 lbs	2 200 kg
Axle Loading without Load		
Front	20,100 lbs	9 100 kg
Rear	18,500 lbs	8 400 kg
WHEELS		
Tire Type	Pneumatic	
Tire Size		
Drive	10.00-20 16PR	
Steer	10.00-20 16PR	

POWERTRAIN

ENGINE		
Type	Cummins Diesel	
Emmissions Type	EPA Tier 4 Final	
Output		
Rated	160 hp	119 kW
Peak	230 hp	172 kW
Governed Speed	2,200 rpm	
Cylinders		
Number	4	
Disp	4.5 l	
Turbocharger	Water-cooled variable geometry	
ALTERNATOR		
Amps	24V	70A
Drive Axle	Kessler D61	
Transmission	TE10	
GEARS		
Forward	3	
Reverse	3	
BATTERY		
Capacity	2 x 12 V 120 Ah CCA	
BRAKES		
Service	Wet Disc	
Parking	Dry Disc	
TANK CAPACITY		
DEF	5 gal	19 l

LIFTING PERFORMANCE

PERFORMANCE

SPEED		
Travel		
With Load	18.6 mph	30 km/h
Without Load	19.2 mph	31 km/h
Lifting		
With Load	79 ft/min	0.40 m/s
Without Load	89 ft/min	0.45 m/s
Lowering		
With Load	98 ft/min	0.50 m/s
Without Load	94 ft/min	0.48 m/s
DRAWBAR		
Pull-Max	23,200 lbf	103 kN
GRADEABILITY @ 1 MPH (1.6 KM/H)		
With Load	29%	

In the interest of continual equipment development, SANY Canada Ltd. reserves the right to change these specifications at any time without prior notification.

MAST

Mast Type	Duplex w/o Freelift	
*Height Maximum	148"	3 760 mm
*OALH	143"	3 635 mm
*Extended	216"	5 480 mm
*Freelift	-	-
Fork Type	Pin	
Fork Size	96" x 8" x 3"	
Carriage Type	Apron	

* All imperial numbers have been rounded to the nearest whole number.

ELEVEXtreme SANY

MONTREAL (Head office)
19151 A, Cruickshank Avenue
Baie-D'Urfé (Québec) H9X 3N9

Phone: 418 694-4223
Toll free: 1 866 421-4223
info@elevex.ca

QUEBEC
1279, Paul-Émile Giroux St. Suite 200
Québec (Québec) G1C 0K9

SAGUENAY
2305, Alexis-Le-Trotteur St.
Jonquière (Québec) G7X 9H8

elevex.ca