PRODUCT **SPECIFICATIONS**

# FORKLIFT TRUCK SCP140A-6

## STANDARD FEATURES

- Enclosed cab with automatic climate control and with a high back
- Powered tilting cab
- Reverse camera with object detection system
- Powerful Cummins engine

**30,870 lbs**
Rated Load Capacity

**40, 120 lbs**
Weight Without Load

**130"**
Wheelbase

**Cummins Diesel**
Engine

## DIMENSIONS

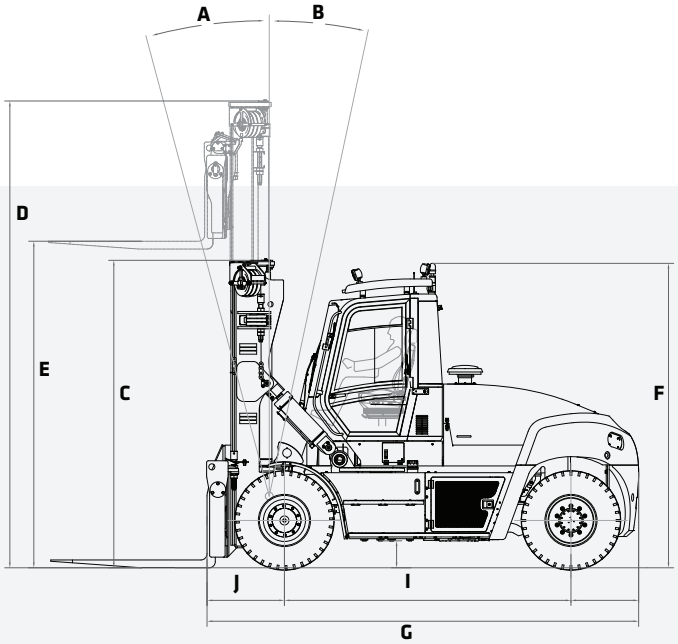


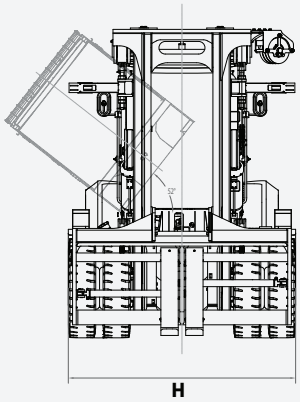


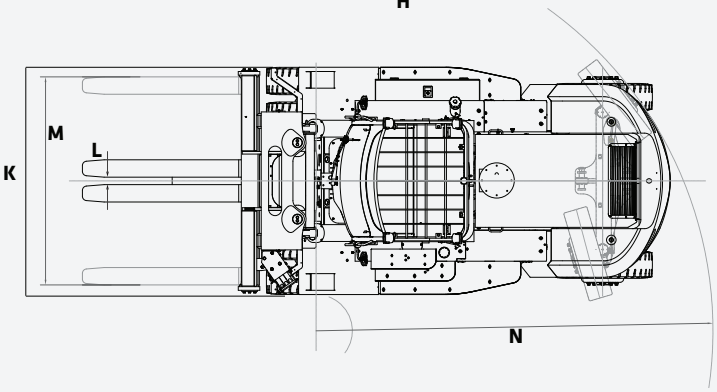


| DIMENSIONS | | | |
|---|---|---|---|
| **MAST** | | | |
| A | Forward Tilt | 12° | |
| B | Back Tilt | 15° | |
| C | Height Lowered | 140" | 3 545 mm |
| D | Height Extended | 212" | 5 380 mm |
| E | Lift Height | 148" | 3 760 mm |
| **OVERALL** | | | |
| F | Cab height | 138" | 3 510 mm |
| G | Length to Load Face | 196" | 4 970 mm |
| H | Width | 103" | 2 618 mm |
| I | Wheelbase | 130" | 3 300 mm |
| J | Load Distance | 35" | 891 mm |
| **FORK** | | | |
| | Thickness | 3.5" | 90 mm |
| | Width | 8" | 200 mm |
| | Length | 96" | 2 440 mm |
| **CARRIAGE** | | | |
| K | Width | 99" | 2 520 mm |
| **FORK SPREAD** | | | |
| L | In-In Minimum | 3.4" | 86 mm |
| M | Out-Out Maximum | 94.3" | 2 396 mm |
| **GROUND CLEARANCE** | | | |
| | Minimum Ground Clearance | 11.8" | 300 mm |
| **AISLE WIDTH** | | | |
| | With Load Length | 319" | 8 102 mm |
| **TURNING RADIUS** | | | |
| N | Outside | 180" | 4 571 mm |

In the interest of continual equipment development, SANY Canada Ltd. reserves the right to change these specifications at any time without prior notification.
©2023 SANY Canada Ltd.

# PRODUCT **SPECIFICATIONS**
# **FORKLIFT TRUCKS** | **SCP140A-6**

## STANDARD AND OPTIONAL EQUIPMENT

**s** = standard / **o** = optional

| SCP140A-6 | ENGINE |
|---|---|
| s | QSB 6.7l Cummins Diesel with 164HP @ 2,300rpm |
| s | Tier 4 Final EPA Emissions Compliant |
| s | High Intake, Long Life Air Filter w/ Safety Element |
| s | Fuel Filter with Water Separator |
| s | Variable Geometry Turbocharger |
| s | 500-Hr Engine-Oil-Change Interval |
| s | Electronic Controlled |
| s | 24V, 70A Alternator |
| | **DRIVETRAIN** |
| s | Dana TE-10 Transmission |
| s | 3 FWD & 3 REV gears |
| s | Kessler D81 Drive Axle |
| s | Heavy Duty Wet Disc Brakes |
| s | Electronically Actuated Parking Brake |
| s | 6 x 12.00-20 Pneumatic Tires |
| | **MAST** |
| s | Duplex Mast, MFH 148", OALH 140", EXT 212" |
| o | Duplex Mast, MFH 196", OALH 164", EXT 261" |
| s | Pin Type Carriage |
| o | Apron Type Carriage |
| s | Simultaneous and Independent Fork Positioner |
| o | Side Shift Carriage |
| s | 96" x 7.87" x 3.54" Pin Type Forks |
| | **CABIN** |
| s | High Visibility Enclosed Cabin w/ Curved Glass |
| o | Grammer Air Suspension Cloth Seat |
| s | Climate Control with A/C and Heat |
| s | Ergonomic Multifunction Joystick |
| o | Individual Hydraulic Control Levers |
| s | Telescoping and Tilting Steering Column |

In the interest of continual equipment development, SANY Canada Ltd. reserves the right to change these specifications at any time without prior notification.
©2023 SANY Canada Ltd.

## STANDARD AND OPTIONAL EQUIPMENT

**s** = standard / **o** = optional

| SCP140A-6 | CABIN (CONTINUED) |
|---|---|
| s | Steering Wheel Spinner Knob |
| o | AM/FM Radio with 2 Speakers and USB Connectivity |
| s | Front, Rear and Top wiper |
| s | Top Retractable Sun Shade |
| s | 12V/24V Power Supply |
| s | Push Button Applied Park Brake |
| o | Reading Light |
| s | Exterior Cabin Mounted Mirrors |
| s | Powered Tilting Cabin for Ease of Maintenance |
| | **ACCESSORIES** |
| o | Reverse Camera w/ 7" Color Display |
| s | Rear Object Detection Sensor up to 10" |
| s | Common Greasing Points for Steer Axle and Mast |
| s | Automatic Engine Fire Extinguisher |
| s | Locking Fuel Cap |
| o | Travel Speed Limiter |
| o | Integrated Tire Pressure Monitoring System |
| o | Extreme Cold Climate Package (Fuel, Engine and Hydraulics) |
| o | Customized Colors or Labels |
| s | Lockable Battery Disconnect Switch |
| o | Steer Wheel Lug Nut Protection |
| o | Rear Lifting Eyes |
| | **LIGHTS** |
| s | 2 Front Fender Mounted LED Lights |
| s | 2 Front Cab Mounted LED Lights |
| s | 2 Rear Cab Mounted LED Lights |
| s | 2 Mast Mounted LED Working Lights |
| o | Indicator and Hazard lights |
| o | Rotating Amber Beacon |
| o | Additional LED Lights |

In the interest of continual equipment development, SANY Canada Ltd. reserves the right to change these specifications at any time without prior notification.
©2023 SANY Canada Ltd.

# PRODUCT **SPECIFICATIONS FORKLIFT TRUCKS** ||| **SCP140A-6**

## WORKING RANGE

### SPECIFICATIONS

| | | |
|---|---|---|
| **GENERAL** | | |
| Rated Load Capacity | 30,870 lbs | 14 000 kg |
| Load Center | 24" | 610 mm |
| Load Distance | 35" | 891 mm |
| Wheelbase | 130" | 3 300 mm |
| Hydraulic Tank Capacity | 48 gal | 180 l |
| Fuel Tank Capacity | 71 gal | 270 l |
| **WEIGHTS** | | |
| Total Truck Weight without Load | 40,120 lbs | 18 300 kg |
| Axle Loading with Load | | |
| Front | 66,360 lbs | 30 100 kg |
| Rear | 4,630 lbs | 2 100 kg |
| Axle Loading without Load | | |
| Front | 21,380 lbs | 9 700 kg |
| Rear | 18,740 lbs | 8 500 kg |
| **WHEELS** | | |
| Tire Type | Pneumatic | |
| Tire Size | | |
| Drive | 12.00-20 18PR | |
| Steer | 12.00-20 18PR | |

### POWERTRAIN

| | | |
|---|---|---|
| **ENGINE** | | |
| Type | Cummins QSB 6.7 Diesel | |
| Emmissions Type | EPA Tier 4 Final | |
| Output | | |
| Rated | 164 hp | 122 kW |
| Governed Speed | 2,300 rpm | |
| Cylinders | | |
| Number | 6 | |
| Disp | 6.7 l | |
| Turbocharger | Variable geometry | |
| **ALTERNATOR** | | |
| Amps | 24V | 120A |
| Drive Axle | Kessler D81 | |
| Transmission | Dana TE10 | |
| **GEARS** | | |
| Forward | 3 | |
| Reverse | 3 | |
| **BATTERY** | | |
| Capacity | 24 V 120 Ah | |
| **BRAKES** | | |
| Service | Wet Disc | |
| Parking | Dry Disc | |
| **TANK CAPACITY** | | |
| DEF | 5 gal | 19 l |

## LIFTING PERFORMANCE

### PERFORMANCE

| | | |
|---|---|---|
| **SPEED** | | |
| Travel | | |
| With Load | 15.5 mph | 25 km/h |
| Without Load | 16.8 mph | 27 km/h |
| Lifting | | |
| With Load | 69 ft/min | 0.35 m/s |
| Without Load | 79 ft/min | 0.40 m/s |
| Lowering | | |
| With Load | 98 ft/min | 0.5 m/s |
| Without Load | 94 ft/min | 0.48 m/s |
| **DRAWBAR** | | |
| Pull-Max | 30,350 lbf | 135 kN |
| **GRADEABILITY @ 1 MPH (1.6 KM/H)** | | |
| With Load | 37% | |

In the interest of continual equipment development, SANY Canada Ltd. reserves the right to change these specifications at any time without prior notification.

### MAST

| | | |
|---|---|---|
| TYPE | Duplex | |
| *Height Maximum | 148" | 3 761 mm |
| *OALH | 140" | 3 545 mm |
| *Extended | 212" | 5 380 mm |
| *Freelift | - | - |
| Fork Type | Pin | |
| Carriage Type | Hook | |

* All imperial numbers have been rounded to the nearest whole number.
*Additional mast heights available


**MONTREAL (Head office)**
19151 A, Cruickshank Avenue
Baie-D'Urfé (Québec) H9X 3N9

Phone: 418 694-4223
Toll free: 1 866 421-4223
**info@elevex.ca**

**QUEBEC**
1279, Paul-Émile Giroux St. Suite 200
Québec (Québec) G1C 0K9

**SAGUENAY**
2305, Alexis-Le-Trotteur St.
Jonquière (Québec) G7X 9H8

**elevex.ca**