PRODUCT **SPECIFICATIONS**

FORKLIFT TRUCK SCP160A-6

STANDARD FEATURES

- Enclosed cab with automatic climate control and with a high back
- Powered tilting cab
- Reverse camera with object detection system
- Powerful Cummins engine

35,000 lbs
Rated Load Capacity

42,990 lbs
Weight Without Load

130"
Wheelbase

Cummins Diesel
Engine

DIMENSIONS

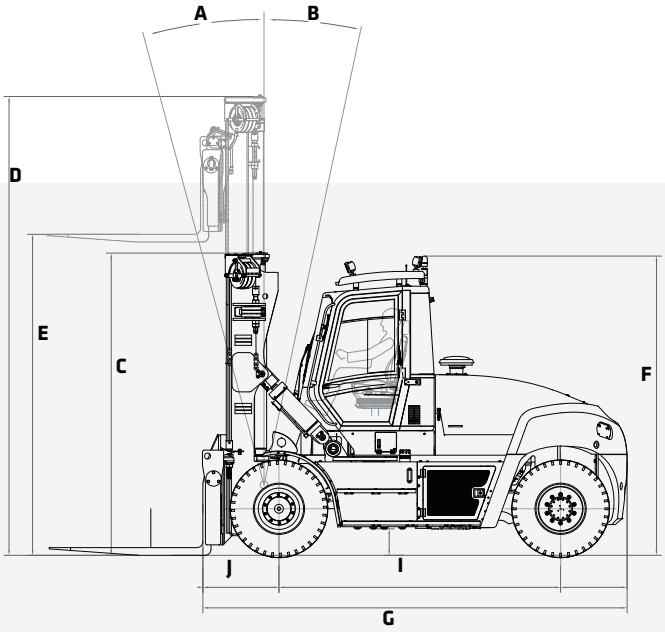

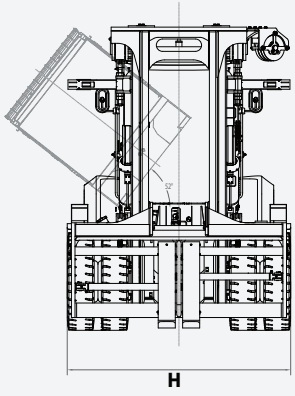

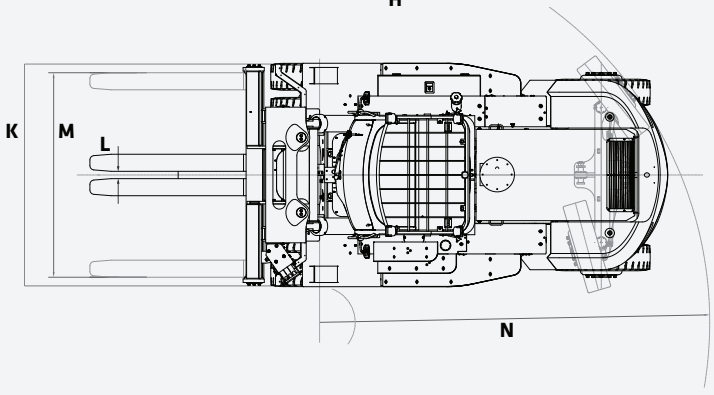

DIMENSIONS			
MAST			
A	Forward Tilt	12°	
B	Back Tilt	15°	
C	Height Lowered	140"	3 545 mm
D	Height Extended	212"	5 380 mm
E	Lift Height	148"	3 760 mm
OVERALL			
F	Cab height	138"	3 510 mm
G	Length to Load Face	196"	4 970 mm
H	Width	103"	2 370 mm
I	Wheelbase	130"	3 300 mm
J	Load Distance	35"	891 mm
FORK			
	Thickness	3.5"	90 mm
	Width	8"	200 mm
	Length	96"	2 440 mm
CARRIAGE			
K	Width	99"	2 520 mm
FORK SPREAD			
L	In-In Minimum	3.4"	86 mm
M	Out-Out Maximum	94.3"	2 396 mm
GROUND CLEARANCE			
	Minimum Ground Clearance	11.8"	300 mm
AISLE WIDTH			
	With Load Length	319"	8 102 mm
TURNING RADIUS			
N	Outside	180"	4 571 mm

In the interest of continual equipment development, SANY Canada Ltd. reserves the right to change these specifications at any time without prior notification.

©2023 SANY Canada Ltd.

STANDARD AND OPTIONAL EQUIPMENT

s = standard / **o** = optional

SCP160A-6	ENGINE
s	QSB 6.7l Cummins Diesel with 164HP @ 2,300rpm
s	Tier 4 Final EPA Emissions Compliant
s	High Intake, Long Life Air Filter w/ Safety Element
s	Fuel Filter with Water Separator
s	Variable Geometry Turbocharger
s	500-Hr Engine-Oil-Change Interval
s	Electronic Controlled
s	24V, 70A Alternator
	DRIVETRAIN
s	Dana TE-10 Transmission
s	3 FWD & 3 REV gears
s	Kessler D81 Drive Axle
s	Heavy Duty Wet Disc Brakes
s	Electronically Actuated Parking Brake
s	6 x 12.00-20 Pneumatic Tires
	MAST
s	Duplex Mast, MFH 148", OALH 140", EXT 212"
o	Duplex Mast, MFH 196", OALH 164", EXT 261"
s	Hook Type Carriage
o	Apron Type Carriage
s	Simultaneous and Independent Fork Positioner
o	Side Shift Carriage
s	96" x 7.87" x 3.54" Pin Type Forks
	CABIN
s	High Visibility Enclosed Cabin w/ Curved Glass
o	Grammer Air Suspension Cloth Seat
s	Climate Control with A/C and Heat
s	Ergonomic Multifunction Joystick
o	Individual Hydraulic Control Levers
s	Telescoping and Tilting Steering Column

In the interest of continual equipment development, SANY Canada Ltd. reserves the right to change these specifications at any time without prior notification.
©2023 SANY Canada Ltd.

STANDARD AND OPTIONAL EQUIPMENT

s = standard / **o** = optional

SCP160A-6	CABIN (CONTINUED)
s	Steering Wheel Spinner Knob
o	AM/FM Radio with 2 Speakers and USB Connectivity
s	Front, Rear and Top wiper
s	Top Retractable Sun Shade
s	12V/24V Power Supply
s	Push Button Applied Park Brake
o	Reading Light
s	Exterior Cabin Mounted Mirrors
s	Powered Tilting Cabin for Ease of Maintenance
	ACCESSORIES
o	Reverse Camera w/ 7" Color Display
s	Rear Object Detection Sensor up to 10"
s	Common Greasing Points for Steer Axle and Mast
s	Automatic Engine Fire Extinguisher
s	Locking Fuel Cap
o	Travel Speed Limiter
o	Integrated Tire Pressure Monitoring System
o	Extreme Cold Climate Package (Fuel, Engine and Hydraulics)
o	Customized Colors or Labels
s	Lockable Battery Disconnect Switch
o	Steer Wheel Lug Nut Protection
o	Rear Lifting Eyes
	LIGHTS
s	2 Front Fender Mounted LED Lights
s	2 Front Cab Mounted LED Lights
s	2 Rear Cab Mounted LED Lights
s	2 Mast Mounted LED Working Lights
o	Indicator and Hazard lights
o	Rotating Amber Beacon
o	Additional LED Lights

In the interest of continual equipment development, SANY Canada Ltd. reserves the right to change these specifications at any time without prior notification.
©2023 SANY Canada Ltd.

PRODUCT **SPECIFICATIONS FORKLIFT TRUCKS** ||| **SCP160A-6**

WORKING RANGE

SPECIFICATIONS

GENERAL		
Rated Load Capacity	35,000 lbs	16 000 kg
Load Center	24"	610 mm
Load Distance	35"	891 mm
Wheelbase	130"	3 300 mm
Hydraulic Tank Capacity	48 gal	180 l
Fuel Tank Capacity	71 gal	270 l
WEIGHTS		
Total Truck Weight without Load	42,990 lbs	19 300 kg
Axle Loading with Load		
Front	72,530 lbs	32 900 kg
Rear	5,730 lbs	2 600 kg
Axle Loading without Load		
Front	21,160 lbs	9 600 kg
Rear	21,830 lbs	9 900 kg
WHEELS		
Tire Type	Pneumatic	
Tire Size		
Drive	12.00-20 20PR	
Steer	12.00-20 20PR	

POWERTRAIN

ENGINE		
Type	Cummins QSB 6.7 Diesel	
Emmissions Type	EPA Tier 4 Final	
Output		
Rated	164 hp	122 kW
Governed Speed	2,300 rpm	
Cylinders		
Number	6	
Disp	6.7 l	
Turbocharger	Variable geometry	
ALTERNATOR		
Amps	24V	120A
Drive Axle	Kessler D81	
Transmission	Dana TE10	
GEARS		
Forward	3	
Reverse	3	
BATTERY		
Capacity	24 V 120 Ah	
BRAKES		
Service	Wet Disc	
Parking	Dry Disc	
TANK CAPACITY		
DEF	5 gal	19 l

LIFTING PERFORMANCE

PERFORMANCE

SPEED		
Travel		
With Load	15.5 mph	25 km/h
Without Load	16.8 mph	27 km/h
Lifting		
With Load	69 ft/min	0.35 m/s
Without Load	79 ft/min	0.40 m/s
Lowering		
With Load	98 ft/min	0.5 m/s
Without Load	94 ft/min	0.48 m/s
DRAWBAR		
Pull-Max	30,350 lbf	135 kN
GRADEABILITY @ 1 MPH (1.6 KM/H)		
With Load	33%	

In the interest of continual equipment development, SANY Canada Ltd. reserves the right to change these specifications at any time without prior notification.

MAST

TYPE	Duplex	
*Height Maximum	148"	3 761 mm
*OALH	140"	3 545 mm
*Extended	212"	5 380 mm
*Freelift	-	-
Fork Type	Pin	
Carriage Type	Hook	

* All imperial numbers have been rounded to the nearest whole number.
*Additional mast heights available.

MONTREAL (Head office)
19151 A, Cruickshank Avenue
Baie-D'Urfé (Québec) H9X 3N9

Phone: 418 694-4223
Toll free: 1 866 421-4223
info@elevex.ca

QUEBEC
1279, Paul-Émile Giroux St. Suite 200
Québec (Québec) G1C 0K9

SAGUENAY
2305, Alexis-Le-Trotteur St.
Jonquière (Québec) G7X 9H8

elevex.ca