PRODUCT **SPECIFICATIONS**

FORKLIFT TRUCK SCP160V4

STANDARD FEATURES

- Powered tilting cab
- Backup camera with object detection system
- Separate brake fluid and hydraulic oil tanks
- Enclosed cab with automatic climate control and with a high back
- Powerful Cummins engine

36,000 lbs
Rated Without Load

52,000 lbs
Weight Without Load

148"
Wheelbase

Cummins Diesel
Engine

DIMENSIONS

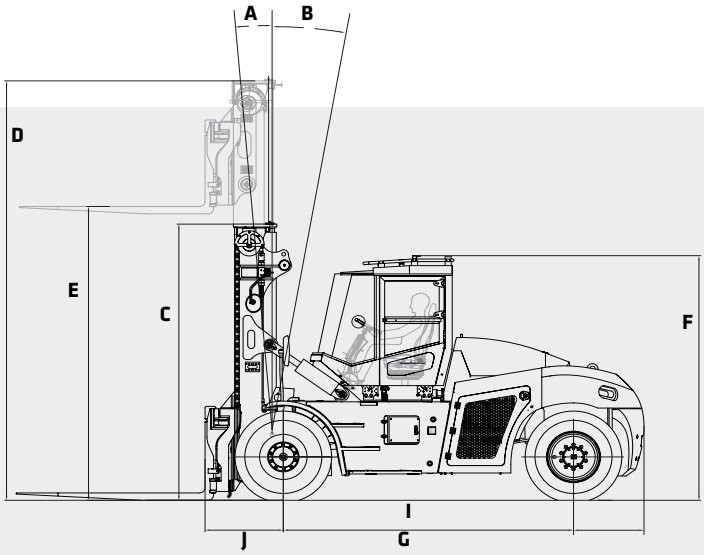

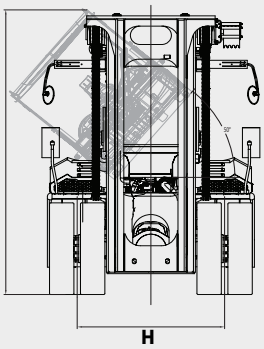

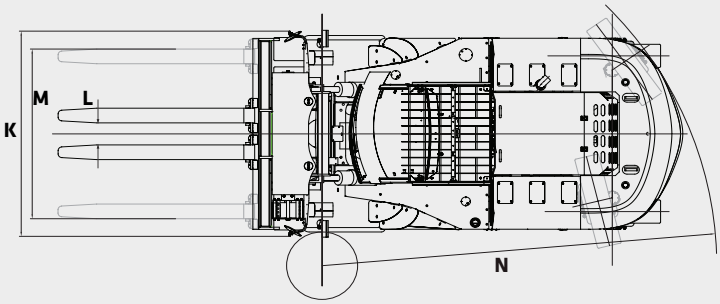

DIMENSIONS			
MAST			
A	Forward Tilt	15°	
B	Back Tilt	12°	
C	Height Lowered	149"	3 804 mm
D	Height Extended	226"	5 754 mm
E	Lift Height	157"	4 000 mm
OVERALL			
F	Cab height	141"	3 590 mm
G	Length to Load Face	225"	5 705 mm
H	Width	115"	2 910 mm
I	Wheelbase	148"	3 750 mm
J	Load Distance	41"	1 043 mm
FORK			
	Thickness	4"	100 mm
	Width	7"	200 mm
	Length	94"	2 400 mm
CARRIAGE			
K	Width	100"	2 540 mm
FORK SPREAD			
L	In-In Minimum	11"	275 mm
M	Out-Out Maximum	90"	2 274 mm
GROUND CLEARANCE			
	Minimum Ground Clearance	12"	300 mm
AISLE WIDTH			
	With Load Length	350"	8 883 mm
TURNING RADIUS			
N	Outside	205"	5 200 mm

In the interest of continual equipment development, SANY Canada Ltd. reserves the right to change these specifications at any time without prior notification.
©2023 SANY Canada Ltd.

PRODUCT **SPECIFICATIONS**
FORKLIFT TRUCKS ||| **SCP160V4**

STANDARD AND OPTIONAL EQUIPMENT

s = standard / **o** = optional

SCP160V4	ENGINE
s	QSB 6.7L Cummins Diesel with 225HP @ 2,200rpm
s	Tier 4 Final EPA Emissions Compliant
s	High Intake, Long Life Air Filter w/ Safety Element
s	Fuel Filter with Water Separator
s	Variable Geometry Turbocharger
s	500-Hr Engine-Oil-Change Interval
s	Electronic Controlled
s	24V, 100A Alternator
s	Turbocharger Protection via Engine Shut Off Delay
	DRIVETRAIN
s	Dana TE17 Transmission
s	3 Forward & 3 Reverse Gears
s	Kessler D81 Drive Axle
s	Heavy Duty Wet Disc Brakes
s	Electronically Actuated Parking Brake
s	12.00-24 18PR Front Pneumatic Tires
s	12.00-24 18PR Rear Pneumatic Tires
	MAST
s	Duplex Mast, MFH 157", OALH 149", EXT 226"
o	Duplex Mast, Various Heights
s	Hook Type Carriage
o	Apron Type Carriage
s	Independent Fork Positioner
s	Simultaneous Fork Positioner
o	Side Shift Carriage
s	94" x 7.87" x 3.93" Hook Type Forks
	ACCESSORIES
o	Reverse Camera w/ 7" Color Display
s	Rear Object Detection Sensor up to 10"
s	Common Greasing Points for Steer Axle and Mast
s	Automatic Engine Fire Extinguisher
s	Locking Fuel Cap
o	Travel Speed Limiter
o	Integrated Tire Pressure Monitoring System
o	Extreme Cold Climate Package (Fuel, Engine and Hydraulics)
o	Customized Colors or Labels
s	Lockable Battery Disconnect Switch
o	Steer Wheel Lug Nut Protection
s	Rear Lifting Eyes

In the interest of continual equipment development, SANY Canada Ltd. reserves the right to change these specifications at any time without prior notification.
©2023 SANY Canada Ltd.

STANDARD AND OPTIONAL EQUIPMENT

s = standard / **o** = optional

SCP160V4	OPERATOR'S STATION
s	High Visibility Enclosed Cabin w/ Curved Glass
o	Grammer Air Suspension Cloth Seat
s	Climate Control with A/C and Heat
s	Ergonomic Multifunction Joystick
o	Individual Hydraulic Control Levers
s	Telescoping and Tilting Steering Column
s	Steering Wheel Spinner Knob
o	AM/FM Radio with 2 Speakers and USB Connectivity
s	Front, Rear and Top Wiper
s	Top Retractable Sun Shade
s	12V/24V Power Supply
s	Push Button Applied Park Brake
o	Reading Light
s	Exterior Cabin Mounted Mirrors
s	Powered Tilting Cabin for Ease of Maintenance
	ELECTRICAL
s	2 Front Fender Mounted LED Lights
s	2 Front Cab Mounted LED Lights
s	2 Rear Cab Mounted LED Lights
s	2 Mast Mounted LED Working Lights
o	Indicator and Hazard lights
o	Rotating Amber Beacon
o	Additional LED Lights

In the interest of continual equipment development, SANY Canada Ltd. reserves the right to change these specifications at any time without prior notification.
©2023 SANY Canada Ltd.

PRODUCT **SPECIFICATIONS FORKLIFT TRUCKS** ||| **SCP160V4**

WORKING RANGE

SPECIFICATIONS

GENERAL		
Rated Load Capacity	36,000 lbs	16 330 kg
Load Center	48"	1 220 mm
Load Distance	41"	1 043 mm
Wheelbase	148"	3 750 mm
Hydraulic Tank Capacity	48 gal	183 l
Fuel Tank Capacity	82 gal	310 l
WEIGHTS		
Total Truck Weight without Load	52,000 lbs	23 400 kg
Axle Loading with Load		
Front	77,200 lbs	35 000 kg
Rear	9,700 lbs	4 400 kg
Axle Loading without Load		
Front	24,700 lbs	11 200 kg
Rear	26,900 lbs	12 200 kg
WHEELS		
Tire Type	Pneumatic	
Tire Size		
Drive	12.00-20 18PR	
Steer	12.00-20 18PR	

POWERTRAIN

ENGINE		
Type	Cummins QSB 6.7 Diesel	
Emmissions Type	EPA Tier 4 Final	
Output		
Rated	225 hp	168 kW
Governed Speed	2,200 rpm	
Cylinders		
Number	6	
Disp	6.7 l	
Turbocharger	Variable geometry	
ALTERNATOR		
Amps	24V	100A
Drive Axle	Kessler D91	
Transmission	Dana TE17	
GEARS		
Forward	3	
Reverse	3	
BATTERY		
Capacity	24 V 120 Ah	
BRAKES		
Service	Wet Disc	
Parking	Dry Disc	
TANK CAPACITY		
DEF	10 gal	38 l

LIFTING PERFORMANCE

PERFORMANCE

SPEED		
Travel		
With Load	15 mph	24 km/h
Without Load	16 mph	25 km/h
Lifting		
With Load	78 ft/min	0.40 m/s
Without Load	88 ft/min	0.45 m/s
Lowering		
With Load	88 ft/min	0.45 m/s
Without Load	84 ft/min	0.43 m/s
DRAWBAR		
Pull-Max	31,000 lbf	138 kN
GRADEABILITY @ 1 MPH (1.6 KM/H)		
With Load	33%	

In the interest of continual equipment development, SANY Canada Ltd. reserves the right to change these specifications at any time without prior notification.

MAST

TYPE	Duplex	
*Height Maximum	157"	4 000 mm
*OALH	149"	3 754 mm
*Extended	226"	5 754 mm
*Freelift	-	-
Fork Type	Pin	
Carriage Type	Hook	

* All imperial numbers have been rounded to the nearest whole number.
*Multiple masts heights available from 118" - 275" lift height.

ELEVEXtreme SANY

MONTREAL (Head office)
19151 A, Cruickshank Avenue
Baie-D'Urfé (Québec) H9X 3N9

Phone: 418 694-4223
Toll free: 1 866 421-4223
info@elevex.ca

QUEBEC
1279, Paul-Émile Giroux St. Suite 200
Québec (Québec) G1C 0K9

SAGUENAY
2305, Alexis-Le-Trotteur St.
Jonquière (Québec) G7X 9H8

elevex.ca