PRODUCT **SPECIFICATIONS**

FORKLIFT TRUCK SCP250H4

STANDARD FEATURES

- Powered tilting cab
- Backup camera with object detection system
- Separate brake fluid and hydraulic oil tanks
- Enclosed cab with automatic climate control and with a high back
- Powerful Cummins engine

55,000 lbs
Rated Load Capacity

79,400 lbs
Weight Without Load

169"
Wheelbase

Cummins Diesel
Engine

DIMENSIONS

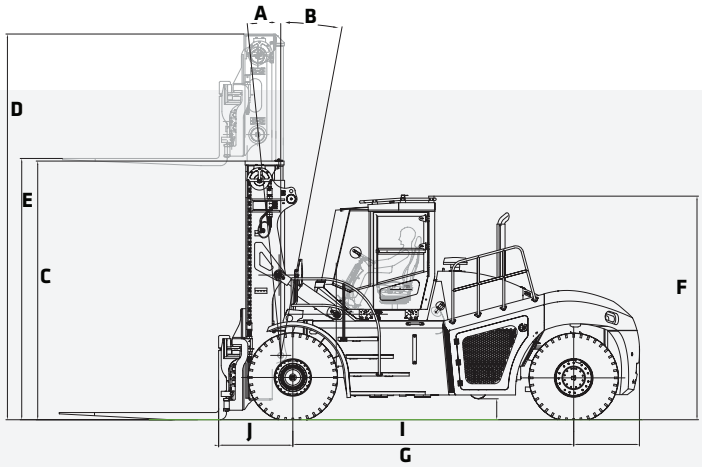

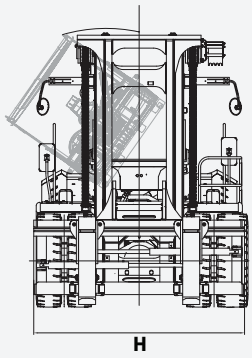

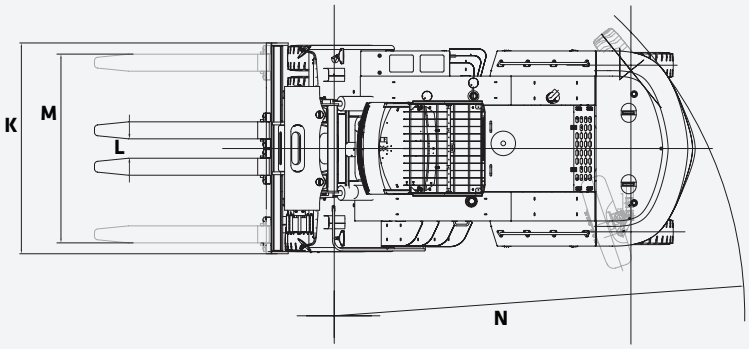

DIMENSIONS			
MAST			
A	Forward Tilt	5°	
B	Back Tilt	10°	
C	Height Lowered	156"	3 950 mm
D	Height Extended	232"	5 710 mm
E	Lift Height	157"	4 000 mm
OVERALL			
F	Cab height	141.8"	3 603 mm
G	Length to Load Face	253"	6 430 mm
H	Width	122"	3 100 mm
I	Wheelbase	169"	4 300 mm
J	Load Distance	45"	1 136 mm
FORK			
	Thickness	4.25"	110 mm
	Width	10"	250 mm
	Length	96"	2 400 mm
CARRIAGE			
K	Width	122"	3 100 mm
FORK SPREAD			
L	In-In Minimum	11.3"	290 mm
M	Out-Out Maximum	109"	2 275 mm
GROUND CLEARANCE			
	Minimum Ground Clearance	12.6"	320 mm
AISLE WIDTH			
	With Load Length	383"	9 720 mm
TURNING RADIUS			
N	Outside	236"	6 000 mm

In the interest of continual equipment development, SANY Canada Ltd. reserves the right to change these specifications at any time without prior notification.
©2023 SANY Canada Ltd.

STANDARD AND OPTIONAL EQUIPMENT

s = standard / **o** = optional

SCP250H4	ENGINE
s	QSB 6.7l Cummins Diesel with 225HP @ 2200rpm
s	Tier 4 Final EPA Emissions Compliant
s	High Intake, Long Life Air Filter w/ Safety Element
s	Fuel Filter with Water Separator
s	Variable Geometry Turbocharger
s	500-Hr Engine-Oil-Change Interval
s	Electronic Controlled
s	24V, 100A Alternator
s	Turbocharger Protection via Engine Shut Off Delay
	DRIVETRAIN
s	Dana TE17 Transmission
s	3 FWD & 3 REV gears
s	Kessler D91 Drive Axle
s	Heavy Duty Wet Disc Brakes
s	Electronically Actuated Parking Brake
s	6 x 14.00-24 Pneumatic Tires
	MAST
s	Duplex Mast, MFH 157", OALH 156", EXT 232"
o	Duplex Mast, Various Heights
s	Hook Type Carriage
o	Apron Type Carriage
s	Independent Fork Positioner
s	Simultaneous Fork Positioner
o	Side Shift Carriage
s	96" x 9.8" x 4.3" Pin Type Forks
	ACCESSORIES
o	Reverse Camera w/ 7" Color Display
s	Rear Object Detection Sensor up to 10"
s	Common Greasing Points for Steer Axle and Mast
s	Automatic Engine Fire Extinguisher
s	Locking Fuel Cap
o	Travel Speed Limiter
o	Integrated Tire Pressure Monitoring System
o	Extreme Cold Climate Package (Fuel, Engine and Hydraulics)
o	Customized Colors or Labels
s	Lockable Battery Disconnect Switch
s	Steer Wheel Lug Nut Protection
s	Rear Lifting Eyes

In the interest of continual equipment development, SANY Canada Ltd. reserves the right to change these specifications at any time without prior notification.
©2023 SANY Canada Ltd.

STANDARD AND OPTIONAL EQUIPMENT

s = standard / **o** = optional

SCP250H4	OPERATOR'S STATION
s	High Visibility Enclosed Cabin w/ Curved Glass
o	Grammer Air Suspension Seat
s	Climate Control with A/C and Heat
s	Ergonomic Multifunction Joystick
o	Individual Hydraulic Control Levers
s	Telescoping and Tilting Steering Column
s	Steering Wheel Spinner Knob
o	Radio and Speaker Ready
s	Front, Rear and Top wiper
s	Top Retractable Sun Shade
s	12V/24V Power Supply
s	Push Button Applied Park Brake
o	Reading Light
s	Exterior Cabin Mounted Mirrors
s	Powered Tilting Cabin for Ease of Maintenance
	ELECTRICAL
s	2 Front Fender Mounted LED Lights
s	2 Front Cab Mounted LED Lights
s	2 Rear Cab Mounted LED Lights
s	2 Mast Mounted LED Working Lights
o	Indicator and Hazard lights
o	Rotating Amber Beacon
o	Additional LED Lights

In the interest of continual equipment development, SANY Canada Ltd. reserves the right to change these specifications at any time without prior notification.
©2023 SANY Canada Ltd.

PRODUCT **SPECIFICATIONS FORKLIFT TRUCKS** ||| SCP250H4

WORKING RANGE

SPECIFICATIONS

GENERAL		
Rated Load Capacity	55,000 lbs	25 000 kg
Load Center	48"	1 220 mm
Load Distance	45"	1 136 mm
Wheelbase	169"	4 300 mm
Hydraulic Tank Capacity		
Main	87 gal	330 l
Brake	40 gal	150 l
Fuel Tank Capacity	106 gal	400 l
WEIGHTS		
Total Truck Weight w/o Load	79,400 lbs	36 000 kg
Axle Loading with Load		
Front	124,000 lbs	56 200 kg
Rear	10,600 lbs	4 800 kg
Axle Loading without Load		
Front	40,100 lbs	18 200 kg
Rear	39,200 lbs	17,800 kg
WHEELS		
Tire Type	Pneumatic	
Tire Size		
Drive	14.00-24 24PR	
Steer	14.00-24 24PR	

POWERTRAIN

ENGINE		
Type	Cummins Diesel	
Output		
Rated	225 hp	168 kW
Governed Speed	2,200 rpm	
Cylinders		
Number	6	
Disp	6.7 l	
Turbocharger	Water-cooled variable geometry	
ALTERNATOR		
Amps	24V	100A
Drive Axle	Kessler D91	
Transmission	Dana TE17	
GEARS		
Forward	3	
Reverse	3	
BATTERY		
Capacity	2 x 12 V 165 Ah CCA	
BRAKES		
Service	Wet Disc	
Parking	Dry Disc	
TANK CAPACITY		
DEF	10 gal	38 l

LIFTING PERFORMANCE

PERFORMANCE

SPEED		
Travel		
With Load	16 mph	26 km/h
Without Load	19 mph	30 km/h
Lifting		
With Load	49 ft/min	0.25 m/s
Without Load	59 ft/min	0.3 m/s
Lowering		
With Load	79 ft/min	0.4 m/s
Without Load	79 ft/min	0.4 m/s
DRAWBAR		
Pull-Max	39,300 lbf	175 kN
GRADEABILITY @ 1 MPH (1.6 KM/H)		
With Load	23%	

MAST

TYPE	Duplex w/o Freelift	
*Height Maximum	157"	4 000 mm
*OALH	156"	3 960 mm
*Extended	232"	5 905 mm
*Freelift	-	-
Fork Type	Pin	
Carriage Type	Hook	

* All imperial numbers have been rounded to the nearest whole number.
*Multiple masts heights available from 118" - 275" lift height.

In the interest of continual equipment development, SANY Canada Ltd. reserves the right to change these specifications at any time without prior notification.

MONTREAL (Head office)
19151 A, Cruickshank Avenue
Baie-D'Urfé (Québec) H9X 3N9

Phone: 418 694-4223
Toll free: 1 866 421-4223
info@elevex.ca

QUEBEC
1279, Paul-Émile Giroux St. Suite 200
Québec (Québec) G1C 0K9

SAGUENAY
2305, Alexis-Le-Trotteur St.
Jonquière (Québec) G7X 9H8

elevex.ca