PRODUCT **SPECIFICATIONS**

FORKLIFT TRUCK SCP320H4

STANDARD FEATURES

- Powered sliding cab
- Backup camera with object detection system
- Separate brake fluid and hydraulic oil tanks
- Enclosed cab with automatic climate control and with a high back
- Powerful Cummins engine

70,500 lbs
Rated Load Capacity

96,600 lbs
Weight w/o Load

189"
Wheelbase

Cummins Diesel
Engine

DIMENSIONS

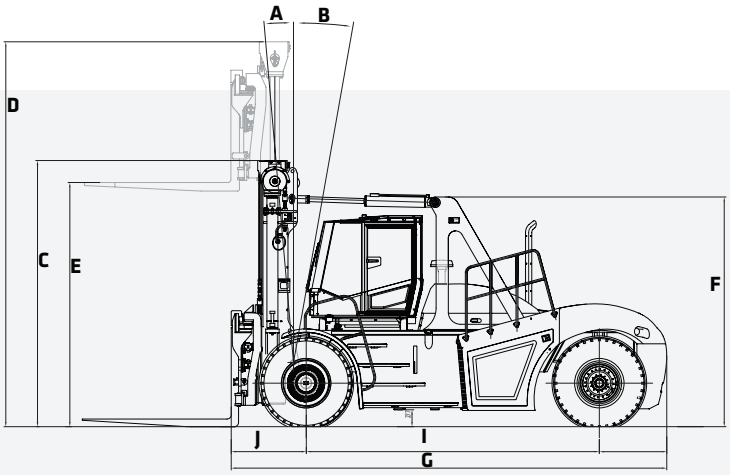

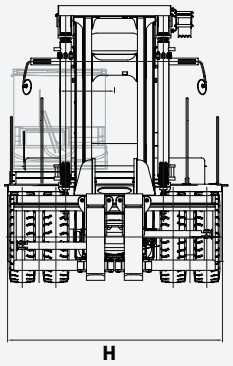

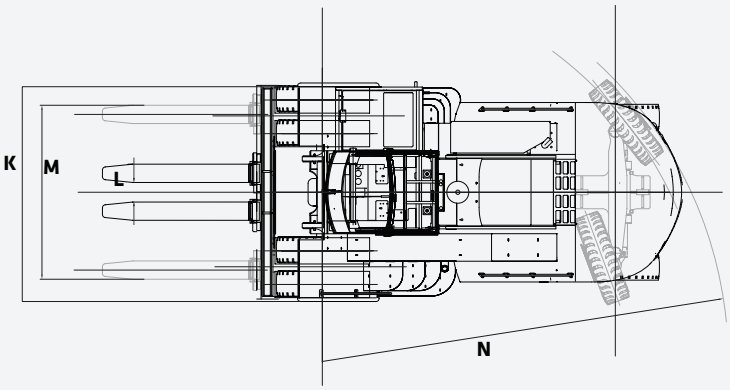

DIMENSIONS			
MAST			
A	Forward Tilt	5°	
B	Back Tilt	10°	
C	Height Lowered	172"	4 360 mm
D	Height Extended	248"	6 305 mm
E	Lift Height	157"	3 761 mm
OVERALL			
F	Tilt Support Height	148"	3 760 mm
G	Length to Load Face	281"	7 125 mm
H	Width	141"	3 580 mm
I	Wheelbase	189"	4 800 mm
J	Load Distance	48"	1 230 mm
FORK			
	Thickness	5"	125 mm
	Width	12"	300 mm
	Length	96"	2 440 mm
CARRIAGE			
K	Width	141"	3 580 mm
FORK SPREAD			
L	In-In Minimum	13"	320 mm
M	Out-Out Maximum	112"	2 850 mm
GROUND CLEARANCE			
	Minimum Ground Clearance	12"	300 mm
AISLE WIDTH			
	With Load Length	414"	10 510 mm
TURNING RADIUS			
N	Outside	262"	6 650 mm

In the interest of continual equipment development, SANY Canada Ltd. reserves the right to change these specifications at any time without prior notification.
©2023 SANY Canada Ltd.

STANDARD AND OPTIONAL EQUIPMENT

s = standard / **o** = optional

SCP320H4	ENGINE
s	QSB 6.7l Cummins Diesel with 260HP @ 2200rpm
s	Tier 4 Final EPA Emissions Compliant
s	High Intake, Long Life Air Filter w/ Safety Element
s	Fuel Filter with Water Separator
s	Variable Geometry Turbocharger
s	500-Hr Engine-Oil-Change Interval
s	Electronic Controlled
s	24V, 100A Alternator
s	Turbocharger Protection via Engine Shut Off Delay
	DRIVETRAIN
s	Dana TE17 Transmission
s	3 FWD & 3 REV gears
s	Kessler D91 Drive Axle
s	Heavy Duty Wet Disc Brakes
s	Electronically Actuated Parking Brake
s	6 x 16.00-25 Pneumatic Tires
	MAST
s	Duplex Mast, MFH 157", OALH 172", EXT 248"
o	Duplex Mast, Various Heights
s	Hook Type Carriage
s	Apron Type Carriage
s	Independent Fork Positioner
s	Simultaneous Fork Positioner
s	Side Shift Carriage
s	96" x 12" x 5" Pin Type Forks
	ACCESSORIES
o	Reverse Camera w/ 7" Color Display
s	Rear Object Detection Sensor up to 10"
s	Common Greasing Points for Steer Axle and Mast
s	Automatic Engine Fire Extinguisher
s	Locking Fuel Cap
o	Travel Speed Limiter
o	Extreme Cold Climate Package (Fuel, Engine and Hydraulics)
o	Integrated Tire Pressure Monitoring System
o	Customized Colors or Labels
s	Lockable Battery Disconnect Switch
s	Steer Wheel Lug Nut Protection
s	Rear Lifting Eyes

In the interest of continual equipment development, SANY Canada Ltd. reserves the right to change these specifications at any time without prior notification.
©2023 SANY Canada Ltd.

STANDARD AND OPTIONAL EQUIPMENT

s = standard / **o** = optional

SCP320H4	OPERATOR'S STATION
s	High Visibility Enclosed Cabin w/ Curved Glass
o	Grammer Air Suspension Seat
s	Climate Control with A/C and Heat
s	Ergonomic Multifunction Joystick
o	Individual Hydraulic Control Levers
s	Telescoping and Tilting Steering Column
s	Steering Wheel Spinner Knob
o	Radio and Speaker Ready
s	Front, Rear and Top wiper
s	Top Retractable Sun Shade
s	12V/24V Power Supply
s	Push Button Applied Park Brake
o	Reading Light
s	Exterior Cabin Mounted Mirrors
s	Powered Sliding Cabin for Increased Visibility and Ease of Maintenance
	ELECTRICAL
s	2 Front Fender Mounted LED Lights
s	2 Front Cab Mounted LED Lights
s	2 Rear Cab Mounted LED Lights
s	2 Mast Mounted LED Working Lights
o	Indicator and Hazard lights
o	Rotating Amber Beacon
o	Additional LED Lights

In the interest of continual equipment development, SANY Canada Ltd. reserves the right to change these specifications at any time without prior notification.
©2023 SANY Canada Ltd.

PRODUCT **SPECIFICATIONS FORKLIFT TRUCKS** ||| SCP320H4

WORKING RANGE

SPECIFICATIONS

GENERAL		
Rated Load Capacity	70,500 lbs	32 000 kg
Load Center	48"	1 230 mm
Load Distance	48"	1 230 mm
Wheelbase	189"	4 800 mm
Hydraulic Tank Capacity		
Main	87 gal	330 l
Brake	26 gal	100 l
Fuel Tank Capacity	105 gal	400 l
WEIGHTS		
Total Truck Weight w/o Load	96,600 lbs	43 800 kg
Axle Loading with Load		
Front	156,000 lbs	70 700 kg
Rear	11,200 lbs	5 100 kg
Axle Loading without Load		
Front	50,700 lbs	23 000 kg
Rear	45,900 lbs	20 800 kg
WHEELS		
Tire Type	Pneumatic	
Tire Size		
Drive	16.00-25	
Steer	16.00-24	

POWERTRAIN

ENGINE		
Type	Cummins Diesel	
Output		
Rated	260 hp	194 kW
Governed Speed	2,200 rpm	
Cylinders		
Number	6	
Disp	6.7 l	
Turbocharger	Water-cooled variable geometry	
ALTERNATOR		
Amps	24V	100A
Drive Axle	Kessler D-91	
Transmission	Dana TE17	
GEARS		
Forward	3	
Reverse	3	
BATTERY		
Capacity	2 x 12 V 165 Ah CCA	
BRAKES		
	Wet Disc	
Parking	Dry Disc	
TANK CAPACITY		
DEF	10 gal	38 l

LIFTING PERFORMANCE

PERFORMANCE

SPEED		
Travel		
With Load	15.5 mph	25 km/h
Without Load	17 mph	28 km/h
Lifting		
With Load	49 ft/min	0.25 m/s
Without Load	59 ft/min	0.3 m/s
Lowering		
With Load	79 ft/min	0.4 m/s
Without Load	79 ft/min	0.40 m/s
DRAWBAR		
Pull-Max	39,550 lbf	176 kN
GRADEABILITY @ 1 MPH (1.6 KM/H)		
With Load	21%	

MAST

TYPE	Duplex w/o Freelift	
Height *Maximum	157"	4 000 mm
*OALH	172"	4 360 mm
*Extended	248"	6 305 mm
*Freelift	-	-
Fork Type	Pin	
Carriage Type	Hook	

* All imperial numbers have been rounded to the nearest whole number.
*Multiple masts heights available up to 275" lift height.

In the interest of continual equipment development, SANY Canada Ltd. reserves the right to change these specifications at any time without prior notification.

MONTREAL (Head office)
19151 A, Cruickshank Avenue
Baie-D'Urfé (Québec) H9X 3N9

Phone: 418 694-4223
Toll free: 1 866 421-4223
info@elevex.ca

QUEBEC
1279, Paul-Émile Giroux St. Suite 200
Québec (Québec) G1C 0K9

SAGUENAY
2305, Alexis-Le-Trotteur St.
Jonquière (Québec) G7X 9H8

elevex.ca