SANY®

ELEVEXtreme

SCP460C1

SANY HEAVY DUTY FORKLIFT TRUCKS

Heavy-Duty Load Capacity Ship on Land

RATED CAPACITY
265kW/2100rpm

OVERALL WEIGHT
57900kg

RATED LOAD
46t

LIFTING HEIGHT
4m

Product Parameters

Technical Parameter		
ITEM	**UNIT**	**SCP460C1**
Overall weight	t	57.9
Rated capacity	t	46
Lift speed (laden/unladen)	mm/s	250/300
Lowering speed (laden/unladen)	mm/s	400/400
Travel speed (laden/unladen)	km/h	23/25
Gradeability (laden)	%	30
Length overall L	mm	10400
Width overall W	mm	4300
Height overall H	mm	4500
Load center L1	mm	1200
Wheel base L2	mm	5500
Overhang front L3	mm	1396
Overhang rear L4	mm	1100
Ground clearance H2	mm	430
Seat height above ground H4	mm	2360
Inner turning radius R1	mm	1110
Outer turning radius R2	mm	7600
Front track width W1	mm	3033
Rear track width W2	mm	2740
Mast height (Retracted H /extended H1)	mm	4500/6430
Lift height standard H3	mm	4000
Mast tilt (forward/backwards)	deg	5/10

Configuration Parameter			
CONFIGURATION		**UNIT**	**SCP460C1**
Engine	Type	-	VOLVO TAD1151VE
	Rated capacity	kW/rpm	265/2100
	Max torque	Nm/rpm	1780/1260
	Emission standard	-	III
Transmission type		-	DANA 15.5HR36000
Drive axle type		-	SANY WF / Kessler D102 PL341
Forks	Dimension (Length×width×height)	mm	2400×300×140
	Fork distance (Minimum~maximum)	mm	1550~3150
	Applicaton	-	Large tonnage or bulk cargo
Tire dimension		-	18.00-25PR

Dimensions

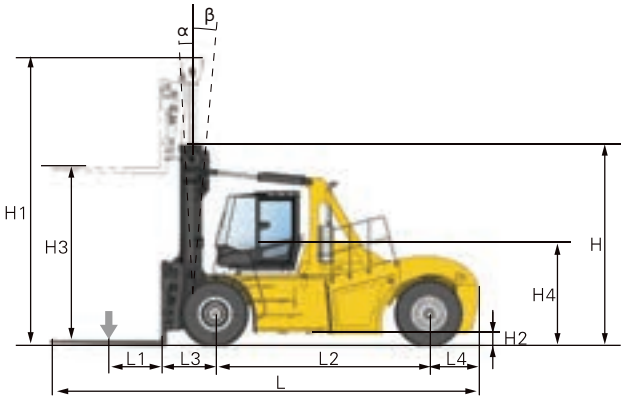

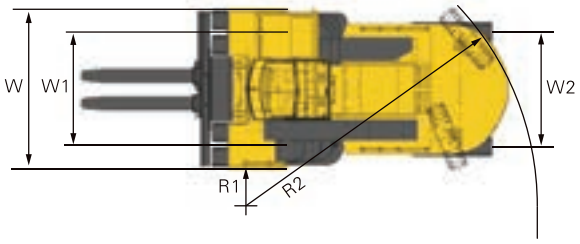

MONTREAL (Head office)
19151 A, Cruickshank Avenue
Baie-D'Urfé (Québec) H9X 3N9

Phone: 418 694-4223
Toll free: 1 866 421-4223
info@elevex.ca

QUEBEC
1279, Paul-Émile Giroux St. Suite 200
Québec (Québec) G1C 0K9

SAGUENAY
2305, Alexis-Le-Trotteur St.
Jonquière (Québec) G7X 9H8

elevex.ca