SANY®

ELEVEXtreme

SCPE160

SANY HEAVY DUTY FORKLIFT TRUCKS

OVERALL WEIGHT
22500kg

RATED LOAD
16t

LIFTING HEIGHT
4m

Product Parameters

Technical Parameter		
ITEM	**UNIT**	**SCPE160**
Overall weight	t	22.5
Rated capacity	t	16
Lift speed (laden/unladen)	mm/s	400/450
Lowering speed (laden/unladen)	mm/s	450/430
Travel speed (laden/unladen)	km/h	22/24
Gradeability (laden)	%	15
Length overall L	mm	8094
Width overall W	mm	2834
Height overall H	mm	3754
Load center L1	mm	1200
Wheel base L2	mm	3750
Overhang front L3	mm	943
Overhang rear L4	mm	961
Ground clearance H2	mm	328
Seat height above ground H4	mm	1923
Inner turning radius R1	mm	685
Outer turning radius R2	mm	5200
Front track width W1	mm	1898
Rear track width W2	mm	2090
Mast height (Retracted H /extended H1)	mm	3754/5704
Lift height standard H3	mm	4000
Mast tilt (forward/backwards)	deg	6/12

Configuration Parameter			
CONFIGURATION		**UNIT**	**SCPE160**
Engine	Brand	-	Lvkon
	Rated capacity	kW/rpm	120
Engine	Brand	-	Lvkon
	Rated capacity	kW/rpm	75
Battery	Brand	-	Gotion
	Rated voltage	V	618
	Rated electric quantity	kWh	141
Drive axle brand		-	SANY
Forks	Dimension (Length×width×height)	mm	2440×200×100
	Fork distance (Minimum~maximum)	mm	674~2274
	Applicaton	-	ISO 20'container, large tonnage or bulk cargo
Tire dimension		-	12.00-20PR

Dimensions

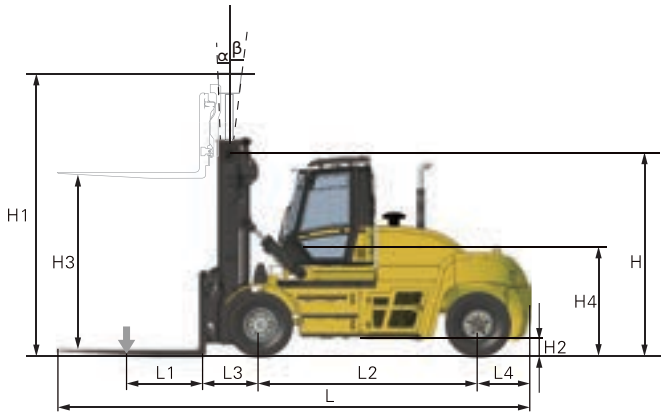

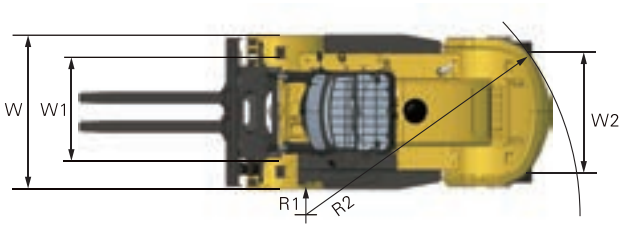

MONTREAL (Head office)
19151 A, Cruickshank Avenue
Baie-D'Urfé (Québec) H9X 3N9

Phone: 418 694-4223
Toll free: 1 866 421-4223
info@elevex.ca

QUEBEC
1279, Paul-Émile Giroux St. Suite 200
Québec (Québec) G1C 0K9

SAGUENAY
2305, Alexis-Le-Trotteur St.
Jonquière (Québec) G7X 9H8

elevex.ca