SANY®

ELEVEXtreme

SCPE250

SANY HEAVY DUTY FORKLIFT TRUCKS

OVERALL WEIGHT
33500kg

RATED LOAD
25t

LIFTING HEIGHT
4m

Product Parameters

Technical Parameter		
ITEM	**UNIT**	**SCPE250**
Overall weight	t	33.5
Rated capacity	t	25
Lift speed (laden/unladen)	mm/s	320/350
Lowering speed (laden/unladen)	mm/s	400/400
Travel speed (laden/unladen)	km/h	23/25
Gradeability (laden)	%	17
Length overall L	mm	8828
Width overall W	mm	3108
Height overall H	mm	3783
Load center L1	mm	1200
Wheel base L2	mm	4300
Overhang front L3	mm	1080
Overhang rear L4	mm	1008
Ground clearance H2	mm	337
Seat height above ground H4	mm	2315
Inner turning radius R1	mm	940
Outer turning radius R2	mm	6000
Front track width W1	mm	2204
Rear track width W2	mm	2450
Mast height (Retracted H /extended H1)	mm	3994/5939
Lift height standard H3	mm	4000
Mast tilt (forward/backwards)	deg	5/10

Configuration Parameter			
CONFIGURATION		**UNIT**	**SCPE250**
Engine	Brand	-	Lvkon
	Rated capacity	kW/rpm	130
Engine	Brand	-	Lvkon
	Rated capacity	kW/rpm	120
Battery	Brand	-	Gotion
	Rated voltage	V	618
	Rated electric quantity	kWh	282
Drive axle brand		-	SANY
Forks	Dimension (Length×width×height)	mm	2440×250×110
	Fork distance (Minimum~maximum)	mm	786~2776
	Applicaton	-	ISO 20'container, large tonnage or bulk cargo
Tire dimension		-	14.00-24PR

Dimensions

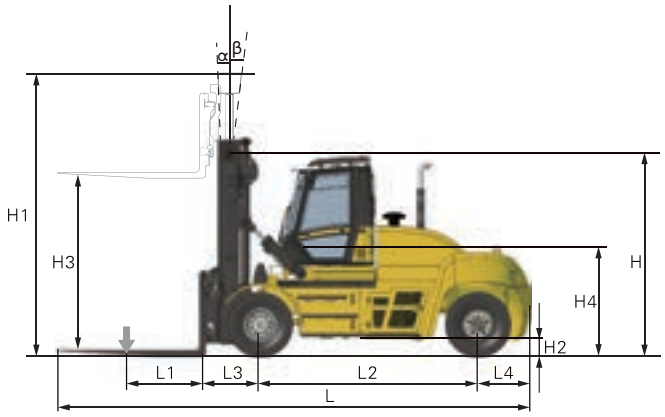

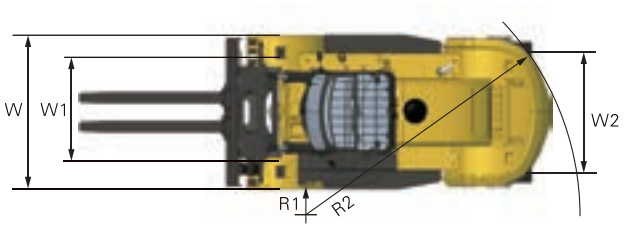

MONTREAL (Head office)
19151 A, Cruickshank Avenue
Baie-D'Urfé (Québec) H9X 3N9

Phone: 418 694-4223
Toll free: 1 866 421-4223
info@elevex.ca

QUEBEC
1279, Paul-Émile Giroux St. Suite 200
Québec (Québec) G1C 0K9

SAGUENAY
2305, Alexis-Le-Trotteur St.
Jonquière (Québec) G7X 9H8

elevex.ca