ELEVEXtreme

SANY

Quality Changes the World

HEAVY DUTY FORKLIFT TRUCKS

SCPE350

- Overall Weight:43800kg
- Rated Load Capacity:35t
- Lifting Height:4m

SCPE350

Product Parameters

Technical Parameter				
ITEM			UNIT	SCPE350
Configuration Parameter	Drive Motor	Type	-	LVKON
		Power	kw/rpm	171
	Pump Motor	Type	-	LVKON
		power	kw/rpm	160
	Motor Controller	Type	-	INOVANCE
	Battery Li-Ion	Type	-	CATL
		Battery Rated Voltage	V	580
		Battery Rated Capacity	kwh	350
	Drive Axle Type		-	SANY WF
	Tire Dimension		-	16.00-25 32PR
Performance Parameter	Rated Load		t	35
	Overall Weight		kg	43800
	Lift Speed (laden/unladen)		mm/s	300/350
	Lowering Speed (laden/unladen)		mm/s	400/400
	Travel Speed (laden/unladen)		km/h	26/28
	Gradeability (laden)		%	17
Dimensions	Length Width Height (L×W×H)		mm	9573×3440×3932
	Load Center (L1)		mm	1200
	Wheel Base (L2)		mm	4800
	Overhang Front (L3)		mm	1230
	Overhang Rear (L4)		mm	1103
	Ground Clearance (H2)		mm	320
	Seat Height Above Ground (H4)		mm	2395
	Inner Turning Radius (R1)		mm	1052
	Outer Turning Radius (R2)		mm	6650
	Front Track Width (W1)		mm	2472
	Rear Track Width (W2)		mm	2450
Mast	Mast Height (retracted H5 /extended H1)		mm	4375/6320
	Lift Height Standard (H3)		mm	4000
	Mast Tilt (forward α/backwards β)		deg	5/10
Forks	Dimension (Length×width×height)		mm	2440×300×125
	Fork Distance (Minimum~maximum)		mm	918~2848

Dimensions

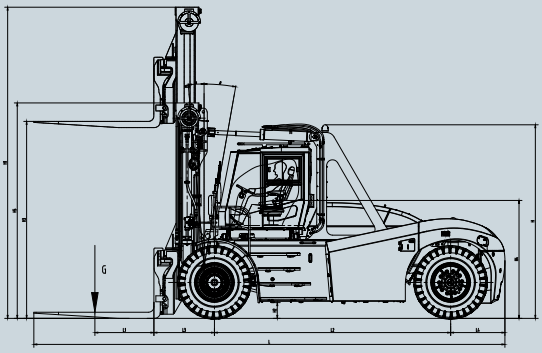

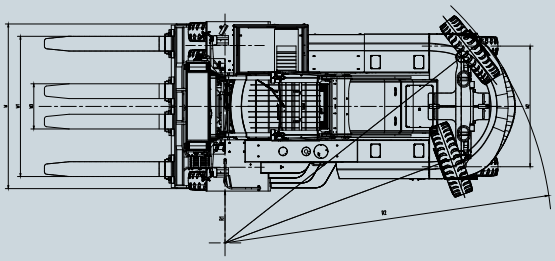

MONTREAL (Head office)
19151 A, Cruickshank Avenue
Baie-D'Urfé (Québec) H9X 3N9

Phone: 418 694-4223
Toll free: 1 866 421-4223
info@elevex.ca

QUEBEC
1279, Paul-Émile Giroux St. Suite 200
Québec (Québec) G1C 0K9

SAGUENAY
2305, Alexis-Le-Trotteur St.
Jonquière (Québec) G7X 9H8

elevex.ca