PRODUCT **SPECIFICATIONS**

REACH STACKER

SRSC4545H4

STANDARD FEATURES

- Safety features include LED work light package, alarm system, reverse camera, object detection system and a dry chemical fire suppression system
- Components from brands you know and trust including Cummins, Dana, and Parker
- Powered Pile Slope
- Powered Sliding Cab

99,200 lbs
Max. Load 1st Row

88,200 lbs
Max. Load 3rd Row

276"
Wheelbase

535"
Max. Lift Height

DIMENSIONS

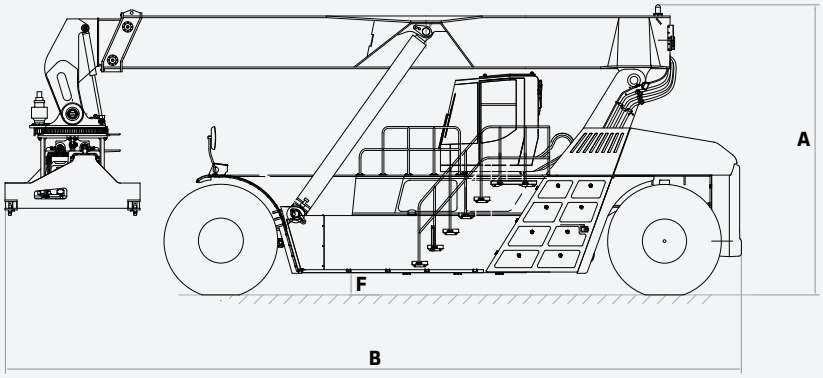

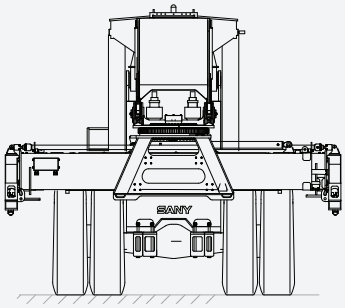

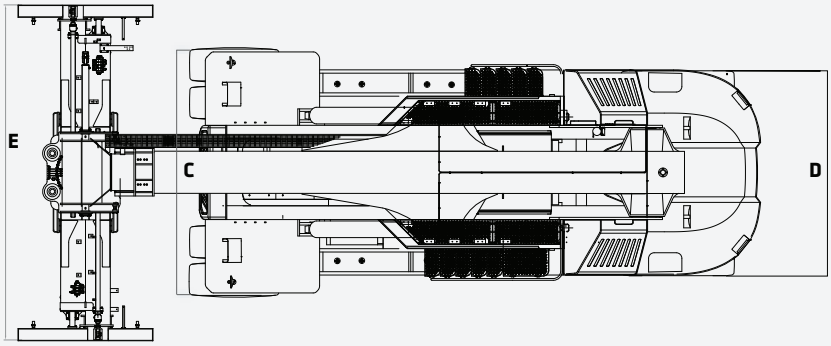

	DIMENSIONS		
	Boom		
	Angle Min./Max.	0/50°	
A	Height Lowered	206"	5 232 mm
	Under Spreader		
	Maximum Lift	535"	13 600 mm
	Minimum Height	55"	1 400 mm
	Overall		
B	Length	522"	13 270 mm
C	Drive Tires Width	120"	3 060 mm
D	Steer Tires Width	123"	3 120 mm
	Spreader Width		
E	Retracted	238"	6 053 mm
	Extended	479"	12 185 mm
F	Wheelbase Center Ground Clearance	16"	420 mm
	Container Minimum Aisle Width		
	20'	570"	14 500 mm
	40'	598"	15 200 mm
	Outside Turning Radius	417"	10 600 mm

In the interest of continual equipment development, SANY Canada Ltd. reserves the right to change these specifications at any time without prior notification.
©2023 SANY Canada Ltd.

PRODUCT **SPECIFICATIONS**
REACH STACKER || SRSC4545H4

STANDARD AND OPTIONAL EQUIPMENT

s = standard / **o** = optional

SRSC4545H4	ENGINE
s	Cummins QSL9 Diesel Engine with 350HP
s	Tier 4 Final EPA Emissions Compliant
s	24V, 95A Alternator
s	High Intake, Long Life Air Filter w/ Safety Element
s	Automatic Fire Extinguisher
	DRIVETRAIN
s	Dana TE-32 Powershift Transmission
s	4 FWD & 4 REV Gears
s	D106 Planetary Kessler Drive Axle w/ Wet Brakes
s	21.00 x 35, 36 Ply Drive and Steer Tires for the SRSC45H4
	HYDRAULICS & LOAD HANDLING
s	Efficient Load Sensing Hydraulic System
s	Optimized Automatic Throttle Up During Lifting Operations
s	Spreader with Proportional Hydraulic System w/ Micro Control
s	Hydraulic Accumulator on Lift Circuit
s	SDJ450H 20'/40' Container Spreader for Single Stack 8'6" Containers
s	Spreader Equipped with Rotation and Powered Pile Slope
o	Wide Twist Lock Spreader for 8'6" and 9'6" Wide Containers (Includes PPS)
s	Spreader Twist Lock Indicator Lights
	CABIN
o	Automatic Greasing Systems for Spreader and Truck
s	Enclosed High Visibility Cabin
s	Hydraulically Powered Sliding Cabin
s	Mechanical Full Suspension Cloth Seat (Grammer)
o	Air Ride, Full Suspension Cloth Seat (Grammer)
s	Stair Wells Leading to Both Sides of Cabin
s	Ergonomic Multi-Function Joy Stick
s	Intuitive Display Panel
s	Steering wheel w/ Spinner Knob
s	24V to 12V DC/DC Converter
s	Rubber Floor Mat
s	Operator Presence and Restraint System

In the interest of continual equipment development, SANY Canada Ltd. reserves the right to change these specifications at any time without prior notification.
©2023 SANY Canada Ltd.

STANDARD AND OPTIONAL EQUIPMENT

s = standard / **o** = optional

SRSC4545H4	ENGINE
s	Rubber Mount Isolators to Reduce Cabin Vibrations
s	Automatic Climate Control with A/C and Heat
o	Reverse Camera w/ 7" Display
s	Object Detection Sensor up to 10' in Reverse Direction
o	Object Detection Sensor up to 16' in Reverse Direction
s	Telescoping and Tilting Steering Column
s	Front, Top and Rear Wipers
s	Recirculation Fan
s	Top Sun Shade
o	Training Seat
o	Additional Hour Meter (Located in Dash)
o	Reading Light
o	12V - 10A Power Supply
o	Radio System (Includes Radio, Speakers and Antenna)
o	Auxiliary Equipment Mounting Shelf
	ACCESSORIES
s	Locking Fuel Cap
o	Cold Climate System: For Temperatures Down to -22°F
o	Empty Seat Shut Down (Factory Preset is 15 Minutes)
s	Lockable Battery Disconnect
s	Operator, Service and Parts Manuals (English)
s	Electric Horn
s	Wide Angle Mirrors
o	Twist Lock Counter
s	6 Front Fender Mounted LED Lights
s	4 Forward Facing Boom LED Work Lights
s	2 Rear Boom Mounted LED Lights
s	2 Side Boom LED Lights
s	2 Spreader Mounted LED Lights
s	Indicator and Hazard Lights
s	Rotating Amber Beacon on Boom
o	Additional LED Lights

In the interest of continual equipment development, SANY Canada Ltd. reserves the right to change these specifications at any time without prior notification.
©2023 SANY Canada Ltd. PORSRS23SRSC4545H4001

PRODUCT **SPECIFICATIONS REACH STACKER** ||| SRSC4545H4

WORKING RANGE

SPECIFICATIONS

GENERAL		
Rated Load Capacity		
1st Row	99,200 lbs	45 000 kg
2nd Row	99,000 lbs	45 000 kg
3rd Row	88,200 lbs	40 000 kg
Wheelbase	276"	7 000 mm
Hydraulic Tank Capacity		
Main	335 gal	1 270 l
Brake	70 gal	265 l
Fuel Tank Capacity	293 gal	1 110 l
WEIGHTS		
Total Truck Weight w/o Load	212,476 lbs	96 700 kg
Axle Loading with Load		
Front	228,932 lbs	104 060 kg
Rear	82,808 lbs	37 640 kg
Axle Loading without Load		
Front	90,948 lbs	41 340 kg
Rear	121,792 lbs	55 360 kg
WHEELS		
Tire Type	Pneumatic	
Tire Size		
Drive	21 x 35 36PR	
Steer	21 x 35 36PR	

POWERTRAIN

ENGINE		
Type	Cummins Diesel	
Output		
Rated	350 hp	260 kW
Governed Speed	2,100 rpm	
Number of Cylinders	6	
Displacement	9 l	
Maximum Engine Torque	1,200 lb-ft	1 626 N-m
Turbocharger	Water-cooled Variable Geometry	
Alternator	24V	95A
Drive Axle	Kessler D106	
TRANSMISSION		
Model Number	Dana TE32	
Forward	4	
Reverse	4	
BATTERY		
Capacity	2 x 12 V 165 Ah CCA	
BRAKES		
Service	Wet Disc	
Parking	Dry Disc	
TANK CAPACITY		
DEF	5 gal	19 l

In the interest of continual equipment development, SANY Canada Ltd. reserves the right to change these specifications at any time without prior notification.

LIFTING PERFORMANCE

PERFORMANCE

SPEED		
Travel		
With Load	9 mph	15 km/h
Without Load	12 mph	20 km/h
Lifting		
With Load	43 ft/min	0.22 m/s
Without Load	78 ft/min	0.40 m/s
Lowering		
With Load	55 ft/min	0.28 m/s
Without Load	70 ft/min	0.36 m/s
GRADEABILITY @ 1 MPH (1.6 KM/H)		
With Load	17%	

* All imperial numbers have been rounded to the nearest whole number.
Ratings are based on ISO 10567:2007. Lift capacity does not exceed 75% of tipping load with the machine on firm, level ground or 87% of hydraulic lifting capacity.

MONTREAL (Head office)
19151 A, Cruickshank Avenue
Baie-D'Urfé (Québec) H9X 3N9

Phone: 418 694-4223
Toll free: 1 866 421-4223
info@elevex.ca

QUEBEC
1279, Paul-Émile Giroux St. Suite 200
Québec (Québec) G1C 0K9

SAGUENAY
2305, Alexis-Le-Trotteur St.
Jonquière (Québec) G7X 9H8

elevex.ca