SANY®

ELEVEXtreme

SRSC45E5

SANY Electric Reach Stacker

1 Higher safety standards

- Products obtained EU CE certification
- With high voltage interlock function, real-time monitoring of high voltage circuit is complete. Prevent faults that are believed to be caused by improper operations.

2 EMC Certification

- The high-voltage and low-voltage wiring harnesses are arranged in layers to reduce the interference of high-voltage signals, and the equipment runs more reliably. The product has passed EMC certification.

3 Optional charging port

- Optional CCS1 and CCS2 charging port to meet the needs of users in different regions.

Product Parameters

Technical Parameter		
ITEM	**UNIT**	**SRSC45E5**
Max. Lifting speed (0/full load)	mm/s	420/250
Max. Lowering speed (0/full load)	mm/s	360/300
Max. Traveling speed (0/full load)	km/h	20/14
Gradeability (0/full load)	%	21/14
Hydraulic system working pressure	bar	340
Overall weight	t	73
Rated load	t	45
Stack layer	-	5
Max. Lift height standard	mm	15100
Max. Boom elevation	deg	0-60
Overall length L	mm	11320
Wheel base L1	mm	6000
Overall height H (retract/extend)	mm	4850
Min. Ground clearance H1	mm	330
Overall width W	mm	6053-12185
Counterweight sideways E	mm	-
Front gauge T1	mm	3033
Rear gauge T2	mm	2790
Min. Turning radius R	mm	8000
Aisle width for 20'container A1	mm	11300
Aisle width for 40'container A2	mm	13600

Configuration Parameter			
CONFIGURATION		**UNIT**	**SRSC45E5**
Energy type		-	Electric
Charging time		min	90
Endurance time		h	6/8
Quantity of electricity		kWh	422/507
Traction battery	Battery type	-	Lithium iron phosphate battery pack
	Standard voltage	V	618
	Thermal management	-	Heating: heating film Cooling: water cooling
Electric motor	Type	-	Pmsm
	Output torque (Rated/peak)	Nm/rpm	1500(Rated) 4200(peak)
	Output power (Rated/peak)	kW	157(Rated) 310(peak)
	Output rotate speed (Rated/peak)	RPM	1000(Rated) 2800(peak)
	Cooling type	-	Water cooling
Transmission type		-	Kessler d102

Dimensions

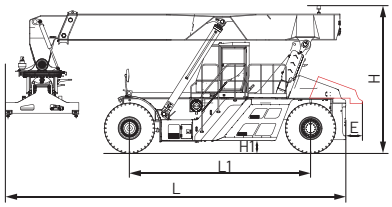

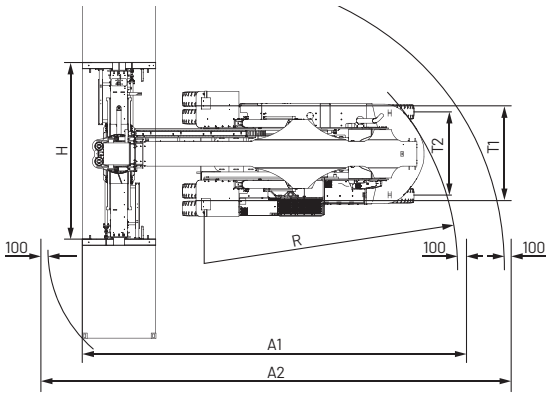

MONTREAL (Head office)
19151 A, Cruickshank Avenue
Baie-D'Urfé (Québec) H9X 3N9

Phone: 418 694-4223
Toll free: 1 866 421-4223
info@elevex.ca

QUEBEC
1279, Paul-Émile Giroux St. Suite 200
Québec (Québec) G1C 0K9

SAGUENAY
2305, Alexis-Le-Trotteur St.
Jonquière (Québec) G7X 9H8

elevex.ca