PRODUCT **SPECIFICATIONS**

EMPTY CONTAINER HANDLER | SDC90K8-C4

STANDARD FEATURES

- Safety features include LED work light package, alarm system, reverse camera, object detection system and a dry chemical fire suppression system
- Components from brands you know and trust including Cummins, Dana, Kessler, and Parker
- Powered Pile Slope and vertical twist-lock on the spreader
- Elevated Cab

19,800 lbs
Max. Load

179"
Wheelbase

8/7 (8' 6" / 9' 6")
Stacking Height

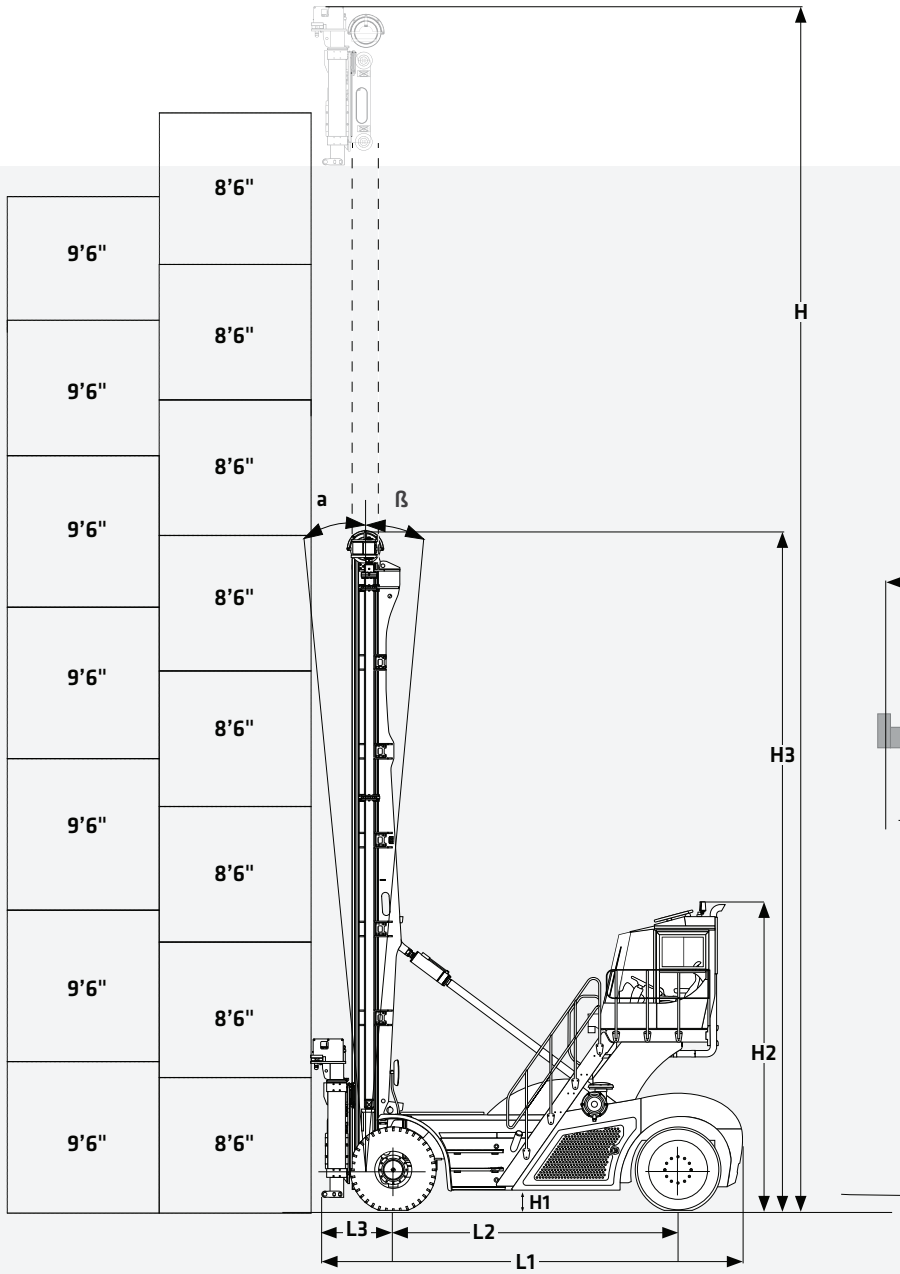

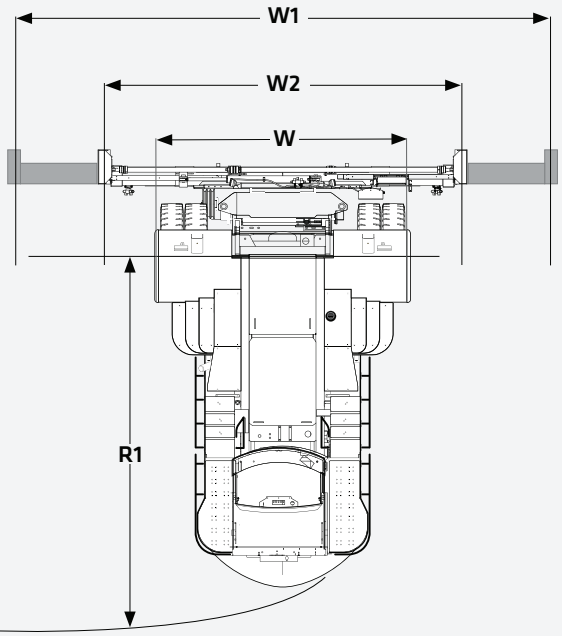

In the interest of continual equipment development, SANY Canada Ltd. reserves the right to change these specifications at any time without prior notification.
©2023 SANY Canada Ltd.

STANDARD AND OPTIONAL EQUIPMENT

s = standard / **o** = optional

SDC90K8-C4	ENGINE
s	Cummins QSB6.7 EPA Diesel Engine with 225HP
s	Tier 4 Final EPA Emissions Compliant
s	24V, 95A Alternator
s	High Intake, Long Life Air Filter w/ Safety Element
s	Automatic Fire Extinguisher
s	Exhaust Outlet Above Cabin
	HYDRAULIC SYSTEM
s	Efficient Load Sensing Hydraulic System
s	Optimized Automatic Throttle Up During Lifting Operations
s	SDJ90II 20'/40' Container Spreader for Single Stack ISO Containers
s	Spreader Equipped with Powered Pile Slope
s	Side Shift up to 24" in Both Directions
s	Hydraulic Accumulator on Lift Circuit
s	Spreader Twist Lock Indicator Lights
	DRIVETRAIN
s	Dana 13.7HR3200 Powershift Transmission
s	3 FWD & 3 REV Gears
s	Kessler D81 Planetary Drive Axle w/ Wet Brakes
s	14.00 x 24, 28 Ply Drive and Steer Pneumatic Tires
	ACCESSORIES
s	Locking Fuel Cap
o	Cold Climate System: For Temperatures Down to -22°F
o	Empty Seat Shut Down (Factory Preset is 15 Minutes)
s	Lockable Battery Disconnect
s	Operator, Service and Parts Manuals (English)
s	Electric Horn
s	Wide Angle Mirrors
o	Twist Lock Counter

In the interest of continual equipment development, SANY Canada Ltd. reserves the right to change these specifications at any time without prior notification.
©2023 SANY Canada Ltd.

STANDARD AND OPTIONAL EQUIPMENT

s = standard / **o** = optional

SDC90K8-C4	OPERATOR'S STATION
s	Enclosed High Visibility Cabin
s	High Mounted Cabin
s	Mechanical Full Suspension Cloth Seat (Grammer)
o	Air Ride, Full Suspension Cloth Seat (Grammer)
s	Stair Wells Leading to Both Sides of Cabin
s	Ergonomic Multi-Function Joy Stick
s	Intuitive Display Panel
s	Steering Wheel w/ Spinner Knob
s	24V to 12V DC/DC Converter
s	Rubber Floor Mat
s	Operator Presence and Restraint System
s	Rubber Mount Isolators to Reduce Cabin Vibrations
s	Automatic Climate Control with A/C and Heat
o	Reverse Camera w/ 7" Display
s	Object Detection Sensor up to 10' in Reverse Direction
o	Object Detection Sensor up to 16' in Reverse Direction
s	Telescoping and Tilting Steering Column
s	Front, Top and Rear Wipers
s	Recirculation Fan
s	Top Sun Shade
o	Training Seat
o	Additional Hour Meter (Located in Dash)
o	Reading Light
o	12V - 10A Power Supply
o	Radio System (Includes Radio, Speakers and Antenna)
o	Auxiliary Equipment Mounting Shelf
	ELECTRICAL
s	2 Front Facing Fender Mounted LED Lights
s	4 Forward Facing Cabin Mounted LED Work Lights
s	2 Rear Facing Mast Mounted LED Lights
s	4 Spreader Mounted LED Lights
s	Indicator and Hazard Lights
s	Rotating Amber Beacon on Boom

elevex.ca

In the interest of continual equipment development, SANY Canada Ltd. reserves the right to change these specifications at any time without prior notification.
©2023 SANY Canada Ltd.

PRODUCT **SPECIFICATIONS EMPTY CONTAINER HANDLER** | **SDC90K8-C4**

WORKING RANGE

SPECIFICATIONS

GENERAL		
Stacking Height	8'6" / 9' 6"	8/7 High
Load Capacity	19,800 lbs	9 000 kg
Load Center	48"	1 220 mm
Load Distance	45"	1 143 mm
Wheelbase	179"	4 550 mm
Hydraulic Tank Capacity		
Main	100 gal	380 l
Brake	24 gal	90 l
Fuel Tank Capacity	132 gal	500 l
WEIGHTS		
Total Truck Weight w/o Load	90,200 lbs	41 000 kg
Axle Loading with Load		
Front	86,970 lbs	39 450 kg
Rear	23,770 lbs	10 780 kg
Axle Loading without Load		
Front	56,640 lbs	25 690 kg
Rear	34,250 lbs	15 540 kg
TIRES		
Tire Type	Pneumatic	
Tire Size		
Drive	14.00-24 28 Ply	
Steer	14.00-24 28 Ply	

POWERTRAIN

ENGINE		
Type	Cummins Diesel	
Output		
Rated	225 hp	167 kW
Governed Speed	2,200 rpm	
Number of Cylinders	6	
Displacement	6.7 l	
Turbocharger	Water-cooled Variable Geometry	
Alternator	24V	95A
Drive Axle	Kessler D81	
TRANSMISSION		
Model Number	Dana HR32000	
Forward	3	
Reverse	3	
BATTERY		
Capacity	2 x 12 V 165 Ah	
BRAKES		
Service	Wet Disc	
Parking	Dry Disc	
TANK CAPACITY		
DEF	10 gal	38 l

LIFTING PERFORMANCE

PERFORMANCE

SPEED		
Travel		
With Load	15 mph	24 km/h
Without Load	16 mph	26 km/h
Lifting		
With Load	108 ft/min	0.55 m/s
Without Load	118 ft/min	0.60 m/s
Lowering		
With Load	118 ft/min	0.60 m/s
Without Load	108 ft/min	0.55 m/s
DRAWBAR		
Pull-Max	33,721 lbf	150 kN
GRADEABILITY @ 1 MPH (1.6 KM/H)		
With Load	25%	

STANDARD MAST & SPREADER

Mast Type	Duplex	
Free Lift Height	--	--
Lift Height, Under Twistlocks Max.	837"	21 250 mm
Lift Height, Under Twistlocks Min.	87"	2 200 mm
Mast Height Lowered	484"	12 293 mm
Mast Height Extended, Top of Spreader	859"	21 818 mm
Spreader Adjustment, Min. / Max.	238–480"	6 053 / 12 185 mm
Sideshift Distance	24"	+/- 600 mm
Pile Slope Type	Powered	
Pile Slope	+/- 5°	
Slewing	+/- 3°	

DIMENSIONS

	Mast Tilt, Fwd/Back (a/ß)	2°/4°	
H	Mast Height Extended	859"	21 818 mm
H1	Minimum Ground Clearance	11.8"	300 mm
H2	Cab Height	194"	4 940 mm
H3	Mast Height Lowered	484"	12 293 mm
L1	Overall Length	272"	6 910 mm
L2	Wheelbase	179"	4 550 mm
L3	Load Distance	45"	1 143 mm
W	Overall Width w/o Spreader	162"	4 110 mm
W1	Spreader Width Extended	238"	6 045 mm
	Minimum Aisle Width 40'	551"	13 955 mm
W2	Spreader Width Retracted	479"	12 166 mm
	Minimum Aisle Width 20'	394"	10 000 mm
R1	Outside Turning Radius	236"	5 994 mm

* All imperial numbers have been rounded to the nearest whole number.

Ratings are based on ISO 10567:2007. Lift capacity does not exceed 75% of tipping load with the machine on firm, level ground or 87% of hydraulic lifting capacity.

In the interest of continual equipment development, SANY Canada Ltd. reserves the right to change these specifications at any time without prior notification.

MONTREAL (Head office)
19151 A, Cruickshank Avenue
Baie-D'Urfé (Québec) H9X 3N9

Phone: 418 694-4223
Toll free: 1 866 421-4223
info@elevex.ca

QUEBEC
1279, Paul-Émile Giroux St. Suite 200
Québec (Québec) G1C 0K9

SAGUENAY
2305, Alexis-Le-Trotteur St.
Jonquière (Québec) G7X 9H8