Hyundai High-Voltage Electric Forklift

B-X Series

100/120/130B-X

22,000-29,000 lbs. capacities



ELEVEX™
Material Handling Solutions

HYUNDAI
MATERIAL HANDLING
NO ONE DELIVERS MORE

Next-Generation Electric Power, A New Level of Innovation

THE NEXT GENERATION B-X



Engine-Class Performance

Equipped with a high-output drive system dedicated to large electric forklifts, the B-X Series delivers work performance comparable to large internal combustion engine (ICE) forklifts.

Extended Operating Time for Full-Day Productivity

With a high-performance battery and multiple charging solutions, the B-X Series can operate continuously for up to 12 hours on a single charge, ensuring uninterrupted productivity throughout the workday.

Built for Outdoor Durability

All major components, including the battery, are UL and CE certified for safety and reliability. Key components feature an IP67 waterproof rating, enabling stable operation even in harsh weather conditions.

Operator-Focused, Clean Working Environment

Designed with zero emissions, low noise, and low vibration, the B-X Series reduces operator fatigue while delivering a cleaner and more comfortable workspace.

Outstanding Service Accessibility

A tilting cabin and high-voltage shutoff system provide a safe maintenance environment. Backed by Hyundai Material Handling's professional service engineers, customers receive prompt and reliable support.

* ICE: Internal Combustion Engine
* UL: North American certification (Underwriters Laboratories), CE: European certification (Conformité Européenne)

ENERGY & PERFORMANCE

All the power and heavy-duty capability of large IC engine forklifts, now in electric.

The 100/120/130B-X models provide strong power and high work efficiency, ensuring stable performance in any operating environment.

Performance Equal to ICE Powered Models

Delivers outstanding operational performance in any environment with output equivalent to that of ICE powered forklifts.

Fork lifting / lowering speed



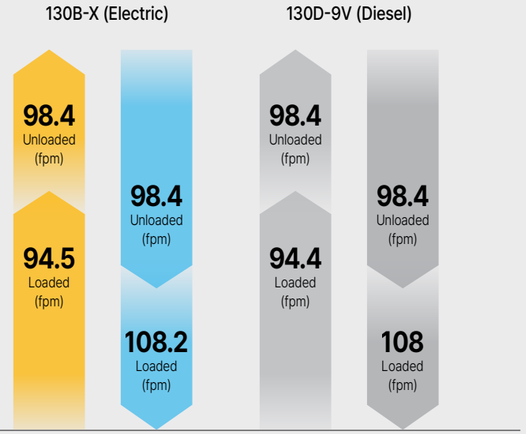

Travel speed

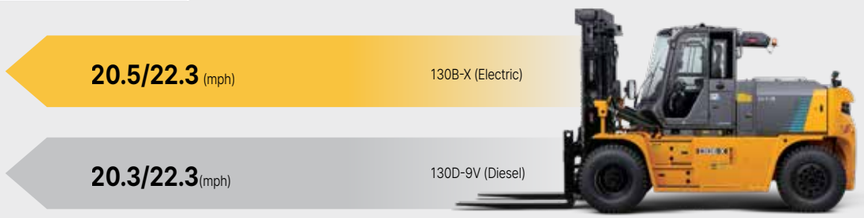

Loaded/Unloaded (mph)

Gradeability



Max. Gradeability, Loaded (%)

130B-X (Electric) 130D-9V (Diesel)



Usable and storable outdoors even in wet weather

IP 67

Indicates that a machine is dust-tight and can be submerged in fresh water up to 1 meter (39") for 30 minutes without damage. This rating indicates a high level of protection against both dust and water ingress.

Water & dust protection ratings for major components

IP 69K

Indicates that a machine is completely dust-proof and can withstand high-pressure, high-temperature water jets, making it suitable for environments requiring rigorous cleaning (such as food processing and pharmaceuticals), as well as outdoor use in extreme conditions. This rating ensures that equipment can endure intensive wash-downs without damage.

Battery pack / Drive motor / Hydraulic motor / Power distribution unit / Battery thermal management system

VCU (Vehicle control unit)

ENERGY

Charging Solutions for Enhanced Productivity and Run Time

The B-X Series runs for up to 12 hours with approximately 0.5 to 1.5 hours of charging, depending on conditions, maximizing field efficiency and minimizing downtime.

(Based on 166kWh battery / 120kW charger configuration)

Safe Indoor or Outdoor Charging

With its IP54-rated water and dust protection, the charger can be installed outdoors and includes safety features to ensure stable charging under all conditions. In addition, the charger can be configured to charge four trucks sequentially.

Standard Lithium Battery Included



Comes equipped with high-performance lithium batteries for extended run time and fast charging, improving uptime and efficiency.

Battery Heating & Cooling System



Maintains optimal battery temperature regardless of external conditions, ensuring stable performance even in extremely hot or cold environments.

Battery Fire Suppression System



Real-time battery monitoring detects abnormal signals and controls charging/discharging, while activating automatic fire suppression systems as needed to ensure safety.

Drive Axle & Hydraulic Oil Cooling System



Maintains optimal lubricant and hydraulic oil temperatures, preventing overheating and improving durability and efficiency.

Charging Solution & Battery Runtime Information

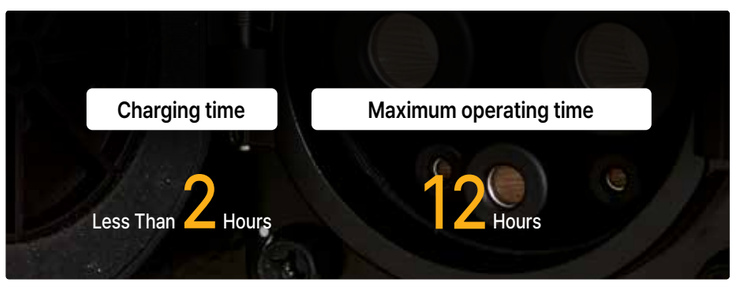

* Based on 166kWh battery option.
** Battery charging time and runtime may vary depending on operational conditions.



Forward View Mirror

A mast-mounted mirror improves visibility of the fork and load position for safer handling.

Large Heated Side Mirrors

Heated mirrors give wide rear visibility for safe operation even in poor weather.

12V Socket & USB Charger

Convenient power supply for accessories inside the cabin.

4.3" LCD Cluster

Displays battery level, temperature and warning lights, and allows mode and feature adjustments.

Air Suspension & Swivel Seat

Enhances comfort with shock absorption.

Constant heating & Cooling

Provides maximum climate control performance regardless of coolant temperature.

Dual Brake Pedals

Allows two-foot operation, familiar to ICE drivers.

CONVENIENCE

Ergonomic design with a range of driver-focused features creates the optimal environment for comfortable and efficient operation.



Driver Convenience Features for Easier Operation

Creep Mode (Optional)

Smooth low-speed movement without using the accelerator pedal while allowing precise movements and reducing operator fatigue.



Allows travel at 1.5mph without pressing the accelerator

Auto Hold / Auto Parking

These functions enhance safety by automatically applying the parking brake when the forklift is stationary or the driver dismounts.



Auto hold: Automatically engages parking brake when brake pedal is held for more than four seconds.
Auto parking: Automatically engages the parking brake when the operator leaves the seat.

Anti-Rollback

Even on slopes, the system gently controls speed to prevent the forklift from rolling back, helping ensure safe stopping and restarting.



Always park on level ground when using this function for safety.

Drive Mode Selection

Operators can choose the most suitable driving mode depending on their preferences and working environment.



N (Normal) : Same acceleration feel as ICE forklifts
H (High) : Provides instant acceleration performance for fast task processing
E (Economic) : Smooth acceleration performance with energy efficiency

SAFETY

Along with great reliability, advanced safety systems help prevent accidents even in unexpected situations to create a safer industrial working environment.



Blue spot & Red zone (Optional)

Blue Spot projects a blue warning light in front of the forklift, warning pedestrians ahead of approaching equipment.

Red Zone creates a visual safety boundary around the forklift using red lighting to help prevent accidents and protect everyone in the workplace.



Pedestrian detection system (Optional)

A smart safety-assist system is designed to prevent collisions between pedestrians and forklifts. When the camera detects a person nearby, the system highlights the surrounding area in yellow on the monitor, providing a clear visual warning to the operator.

MAINTENANCE

A design focused on ease of service and maintenance allows for reliable long-term operation.



Cabin Tilting Switch

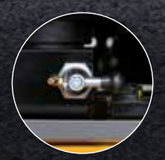



Superior Maintenance Accessibility

The cabin tilts up to 52 degrees, providing superior access for maintenance. Key components such as the powertrain, hydraulic and electrical systems are easily accessible ensuring excellent serviceability. From routine inspections to parts replacement, maintenance is quick, efficient and minimizes downtime.



High-Voltage Cable Safety Design

Bright orange insulation makes high-voltage lines easy to identify, while excellent insulation performance and protection against overheating and external impact ensure safe operation.



High-Voltage Battery Serviceability

Easy component access enables fast and safe maintenance. The Manual Service Disconnect (MSD) cuts off high-voltage power before servicing to ensure a safe work environment.



TCO

Total cost of ownership

Total cost of ownership (TCO) comparison: Next-gen electric model (B-X) vs. ICE powered model (D-9V)

Estimated savings at year 10: Approx. $58,000

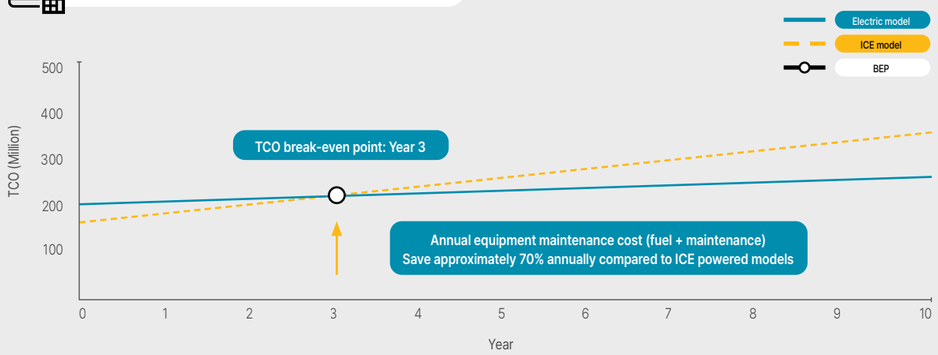

※ Maintenance cost calculation based on 8 operating hours per day, 300 working days per year, standard configuration, with heater and A/C in use.



FEATURES

Performance, efficiency, safety, and serviceability come together in a range of features designed for real-world job site operations.

Work Safety & Convenience

Enhanced Forward Visibility

- A curved windshield, dual wipers, defroster, and mast-mounted mirror improve visibility in every weather condition.

Improved Side Visibility

- Full-glass door design without a center pillar helps reduce blind spots.

Operator-Focused Seating

- Multiple seat configurations, including heated seats, and adjustable arm rests improve operator comfort and safety.

Electro-hydraulic Power Steering

- Delivers precise steering response and smooth handling, providing excellent maneuverability and reduced operator fatigue.

Driving Performance & Efficiency

Dedicated B-X 2-Speed Reduction Gearbox

- Minimizes shifting and reduces power loss to deliver smooth performance and increased efficiency.

Customized Charging Solutions

- Supports fixed, multi-sequential chargers for fleet charging as well as portable charging options for emergency situations.

Easy & Safe Maintenance

Manual Service Disconnect (MSD)

- Manual Service Disconnect (MSD) provides technicians with a safer maintenance environment by isolating high-voltage systems during service.

Improved Hydraulic Oil Tank Access

- Enhanced access to filters and service points simplifies routine maintenance.



A Data-driven Solution for Field Management

With the all-new Hi MATE, you can manage forklift fleets at your logistics site. Visualized data supports the development of management plans for improving safety, boosting productivity, and reducing costs on-site.

Fleet-Level Equipment Operation Management

- Real-time monitoring and post-operation management support by fleet, vehicle, and operator
- Provides operation efficiency, utilization trends, route tracking, fault alerts, and consumable status

Wireless Configuration and Software Update Support

- Remote configuration of key operational features and wireless software update capability

※ Supported models are being expanded

Enhanced Smartphone App

- Fleet and vehicle-level monitoring, remote settings, and work instructions
- Compatible with Galaxy (Android) and iPhone devices

External Communication & Authentication Device Compatibility

- Compatible with third-party communication terminals and operator authentication devices
- Supports basic features such as operation data management

New **B-X Series**

Load Capacity

LOAD CURVE (100B-X)

2-Stage Mast : V330, V400, V500

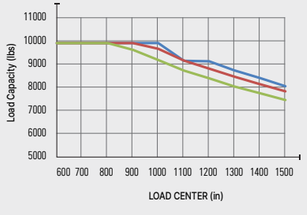

3-Stage Mast : TS450, TS500, TS600

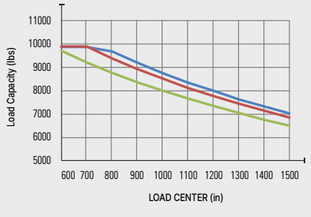

LOAD CURVE (120B-X)

2-Stage Mast : V330, V400, V500

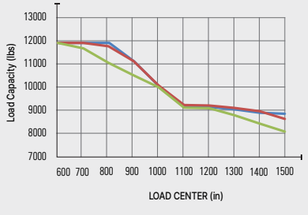

3-Stage Mast : TS450, TS500, TS600

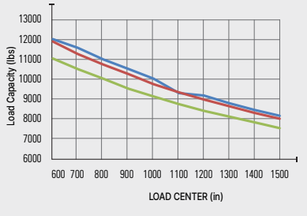

LOAD CURVE (130B-X)

2-Stage Mast : V330, V400, V500

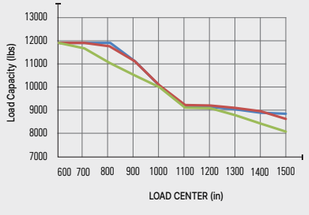

3-Stage Mast : TS450, TS500, TS600

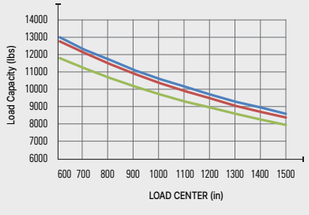

Mast Specifications (100B-X)

Mast Type		Overall Height (Lowered)	Maximum Fork Height	Free Lift	Tilt Angle		Load Capacity (General)		Truck Weight (Unload)
					FWD	RWD	24 in LC	47 in LC	
		in	in	in	deg	deg	lb	lb	lb
2-Stage Limited Free	*V300	118	118	0	15	12	22,000	20,250	34,725
	V330	124	130	0	15	12	22,000	20250	34,893
	V350	128	138	0	15	12	22,000	20,050	35,002
	V400	140	158	0	15	12	22,000	19,500	35,559
	V450	150	177	0	15	12	22,000	19,050	35,834
	V500	161	197	0	15	12	22,000	18,600	36,163
	V550	171	217	0	15	12	22,000	18,050	36,672
	V600	183	236	0	15	12	22,000	17,600	37,007
	V650	193	256	0	15	12	22,000	17,150	37,300
	V700	203	276	0	15	12	22,000	16,850	37,589
3-Stage Full Free Lift	TS450	116	178	61	10	10	22,000	17,950	37,657
	TS500	123	198	68	10	10	22,000	17,400	37,977
	TS550	129	218	74	10	10	22,000	16,950	38,287
	TS600	140	237	81	10	10	21,600	16,400	38,766
	TS650	146	257	88	10	10	20,900	15,850	39,085
	TS700	155	277	94	10	10	20,050	15,300	39,745
	TS750	161	296	101	10	10	19,400	14,850	40,058

Mast Specifications (120B-X)

Mast Type		Overall Height (Lowered)	Maximum Fork Height	Free Lift	Tilt Angle		Load Capacity (General)		Truck Weight (Unload)
					FWD	RWD	24 in LC	47 in LC	
		in	in	in	deg	deg	lb	lb	lb
2-Stage Limited Free	*V300	118	118	0	15	12	26,500	20,250	35,583
	V330	124	130	0	15	12	26,500	20,250	35,750
	V350	128	138	0	15	12	26,500	20,250	35,859
	V400	140	158	0	15	12	26,500	20,250	36,416
	V450	150	177	0	15	12	26,500	20,250	36,692
	V500	161	197	0	15	12	26,500	20,250	37,021
	V550	171	217	0	15	12	26,500	19,800	37,529
	V600	183	236	0	15	12	25,750	19,400	37,865
	V650	193	256	0	15	12	25,000	18,800	38,158
	V700	203	276	0	15	12	24,250	18,400	27,714
3-Stage Full Free Lift	TS450	116	178	61	10	10	26,500	20,050	38,447
	TS500	123	198	68	10	10	26,100	19,500	38,834
	TS550	129	218	74	10	10	25,200	18,950	39,145
	TS600	140	237	81	10	10	24,350	18,400	39,623
	TS650	146	257	88	10	10	23,550	17,950	39,943
	TS700	155	277	94	10	10	22,800	17,400	40,602
	TS750	161	296	101	10	10	22,000	16,850	40,915

Mast Specifications (130B-X)

Mast Type		Overall Height (Lowered)	Maximum Fork Height	Free Lift	Tilt Angle		Load Capacity (General)		Truck Weight (Unload)
					FWD	RWD	24 in LC	47 in LC	
		in	in	in	deg	deg	lb	lb	lb
2-Stage Limited Free	*V300	118	118	0	15	12	29,000	23,900	36,819
	V330	124	130	0	15	12	29,000	23,550	36,987
	V350	128	138	0	15	12	29,000	23,350	37,096
	V400	140	158	0	15	12	29,000	22,700	37,653
	V450	150	177	0	15	12	29,000	22,150	37,929
	V500	161	197	0	15	12	29,000	21,600	38,258
	V550	171	217	0	15	12	28,100	21,050	38,766
	V600	183	236	0	15	12	27,200	20,500	39,102
	V650	193	256	0	15	12	26,500	20,050	39,395
	V700	203	276	0	15	12	25,650	19,500	39,684
3-Stage Full Free Lift	TS450	116	178	61	10	10	28,500	21,250	39,751
	TS500	123	198	68	10	10	27,650	20,700	40,071
	TS550	129	218	74	10	10	26,750	20,150	40,382
	TS600	140	237	81	10	10	25,900	19,600	40,860
	TS650	146	257	88	10	10	25,000	19,050	41,180
	TS700	155	277	94	10	10	24,100	18,500	41,839
	TS750	161	296	101	10	10	23,450	17,950	42,152

SPECIFICATIONS (100/120/130B-X)

GENERAL					
1-1	Manufacturer		HDX		
1-2	Model designation		100B-X	120B-X	130B-X
1-3	Powertrain / drivetrain		Electric	Electric	Electric
1-4	Operator type		Seated	Seated	Seated
1-5	Load capacity / rated load	lb	22,046	26,455	28,660
1-6	Load center distance	in	23.6	23.6	23.6
1-8	Load distance	in	29.5	29.5	30.5
1-9	Wheelbase	in	120	120	120
WEIGHT					
2-1	Service weight	lb	34,769	35,627	37,584
2-2	Axle loading with load, front / rear	lb	49,123/7,692	55,341/6,741	59,430/6,815
2-3	Axle loading without load, front / rear	lb	17,213/17,559	17,046/18,580	17,850/19,733
WHEELS					
3-1	Tyre type		P	P	P
3-2	Tire size, front		10.00-20-16PR	10.00-20-16PR	10.00-20-16PR
3-3	Tire size, rear		10.00-20-16PR	10.00-20-16PR	10.00-20-16PR
3-5	Wheels, number front / rear (X = driven wheels)		4×2	4×2	4×2
3-6	Tread, front	in	72.5	72.5	72.5
3-7	Tread, rear	in	75.2	75.2	75.2
DIMENSIONS					
4-1	Mast tilt, forward / backward	deg	15/12	15/12	15/12
4-2	Height, mast lowered	in	124	124	124
4-3	Free lift	in	-	-	-
4-4	Lift	in	130	130	130
4-5	Height, mast extended	in	187.6	187.6	187.6
4-7	Height of overhead guard (Cabin)	in	115.4(117)	115.4(117)	115.0(116.7)
4-8	Seat height to SIP	in	71	71	70.7
4-12	Towing coupling height	in	24.8	24.8	24.6
4-19	Overall length	in	233.1	233.1	233.5
4-20	Length to face of forks	in	179.9	179.9	180.3
4-21	Overall width	in	96.5	96.5	96.5
4.-22	Fork dimensions ISO 2331	in	3.0 ×7.9 × 53.1	3.0 × 7.9 × 53.1	3.3 × 7.9 × 53.1
4-24	Fork-Carriage width	in	93	93	93
4.-31	Ground clearance, laden, below mast	in	9.8	9.8	9.8
4-32	Ground clearance, centre of wheelbase	in	10.9	10.9	10.7
4-34-1	Working aisle width with 1000 × 1200 mm pallets, crosswise	in	262.2	262.2	262.2
4-34-2	Working aisle width with 800 × 1200 mm pallets, lengthwise	in	262.2	262.2	262.2
4-35	Outside turning radius	in	171.3	171.3	171.3
PERFORMANCE					
5-1	Travel speed, with / without load	mph	20.5/22.4	20.5/22.4	20.5/22.4
5-2	Lifting speed, with / without load	ft/min	94.5/98.4	94.5/98.4	94.5/98.4
5-3	Lowering speed with / without load	ft/min	108.2/98.4	108.2/98.4	108.2/98.4
5-6	Maximum drawbar pull, with load	lbf	30,748	30,748	30,748
5-8	Maximum gradeability, with / without load	%	54.7	50.8	47.7
5-10	Service brake		Hydraulic Electric	Hydraulic Electric	Hydraulic Electric
ELECTRIC DRIVE					
6-1	Drive motor output: 120 kW, S2 - 60 min	kW	120	120	120
6-2	Hydraulic motor output: S3 - 15%	kW	60×2	60×2	60×2
6-4	Battery voltage/nominal capacity K5	V/Ah	618.2/228 (STD) 618.2/268 (OPT)	618.2/228 (STD) 618.2/268 (OPT)	618.2/228 (STD) 618.2/268 (OPT)
6-5	Standard battery weight (min/max)	lb	4,519 (4,067/4,971)	4,519 (4,067/4,971)	4,519 (4,067/4,971)
ADDITIONAL DATA					
10-1	Maximum hydraulic pressure, system/attachment	psi	3,046/2,031	3,046/2,031	3,046/2,031
10-2	Maximum hydraulic flow, system/attachment	GPM-US	105.7/44.9	105.7/44.9	105.7/44.9
10-7	Sound pressure level at the driver's seat (with/without cab)	dB(A)	68.3	68.3	68.3

STANDARD / OPTIONAL FEATURES

Item		100B-X	120B-X	130B-X
Battery & Charging	Battery 618.2 V / 228 Ah (140 kWh)	●	●	●
	Battery 618.2 V / 268 Ah (166 kWh)	○	○	○
	Outdoor Charger 40kW (3P 380/440/480 V)	●	●	●
	Outdoor Charger 20 / 120kW	○	○	○
	Wall Outlet Charger 3.5 / 7 / 20kW	○	○	○
	Sequential Multi Charger	○	○	○
Operator Compartment	Cabin	●	●	●
	Cabin Upper Wiper	○	○	○
	Air Conditioner & Heater	●	●	●
	Radio / USB / Bluetooth	●	●	●
	Fabric Seat / Seat Belt / Armrest / Heated Seat	●	●	●
	Artificial Leather (Vinyl) Seat / Air Suspension / Swivel / Buckle Switch	○	○	○
	Vehicle Fire Extinguisher (1.5 lb)	○	○	○
Mast	Tilt Angle: 15° / 12°	●	●	●
	Tilt Angle: 10° / 10°	○	○	○
	2-Stage V Mast: 130 in	●	●	●
	2-Stage V Mast: 118 – 276 in	○	○	○
	3-Stage TS Mast: 178 – 296 in	○	○	○
Fork	Fork Length : 53 in	●	●	●
	Fork Length : 47, 59, 71, 83, 87, 96, 102 in	○	○	○
Attachment	Fork Carriage (STD)	●	●	●
	Fork Carriage (Sliding, Sliding & Holder, Integral Shaft)	○	○	○
	Side Shifter & Fork Positioner (SYN, IND)	○	○	○

Item		100B-X	120B-X	130B-X
Control System	MCV (Main Control Valve) 5 Spool	●	●	●
	MCV 3 Spool, 4 Spool	○	○	○
	Fingertip Control	●	●	●
	Manual Lever	○	○	○
Tire	Pneumatic Tire	●	●	●
	Solid Tire	○	○	○
Safety	Rear Camera	●	●	●
	Pedestrian Detection System	○	○	○
	Heated Rearview Mirror	○	○	○
	Blue light (Front / Rear), Red zone	○	○	○
	Seatbelt Interlock	○	○	○
	Hi MATE (Basic)	○	○	○
	Hi MATE (Premium)	○	○	○
Convenience	Auto Tilt	○	○	○
	Air Compressor	○	○	○
	Accumulator	○	○	○
	Load & Angle Sensor	●	●	●
	Under Cover, Tire Cover	○	○	○
	Key Switch	○	○	○
	Travel Speed Limit	○	○	○
	Master Switch	○	○	○
	Hazard Lamp (Beacon Lamp)	○	○	○
	License Plate	○	○	○
	Wheel Bolt Protector	○	○	○
	Outdoor Charger Canopy	○	○	○
Oil	VG46	●	●	●
	Tropical, Cold Area	○	○	○

● STD / ○ OPT

DIMENSIONS

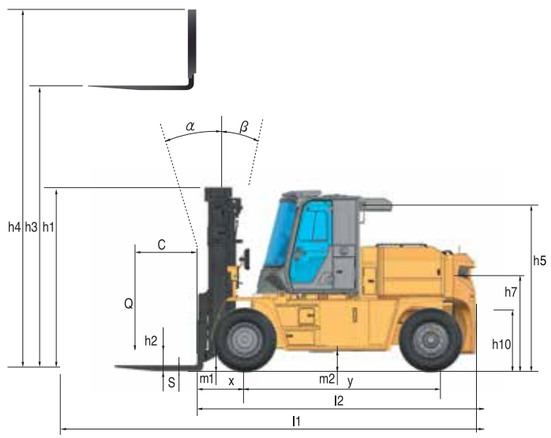

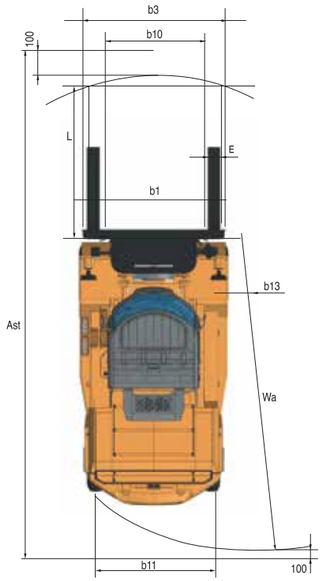

ELEVEX™
Material Handling Solutions

MONTREAL (Head office)
19151 A, Cruickshank Avenue
Baie-D'Urfé (Québec) H9X 3N9

Phone: 418 694-4223
Toll free: 1 866 421-4223
info@elevex.ca

SAGUENAY
2305, Alexis-Le-Trotteur
St. Jonquière (Québec) G7X 9H8

elevex.ca

NO ONE
DELIVERS MORE

HD HYUNDAI XITESOLUTION | MATERIAL HANDLING

6100 Atlantic Blvd.
Norcross, GA 30071
hyundaimaterialhandling.com

678-823-7777

2026. 07