Hyundai High-Voltage Electric Forklift

B-X Series

160, 180B-X

36,000-40,000 lbs. capacities

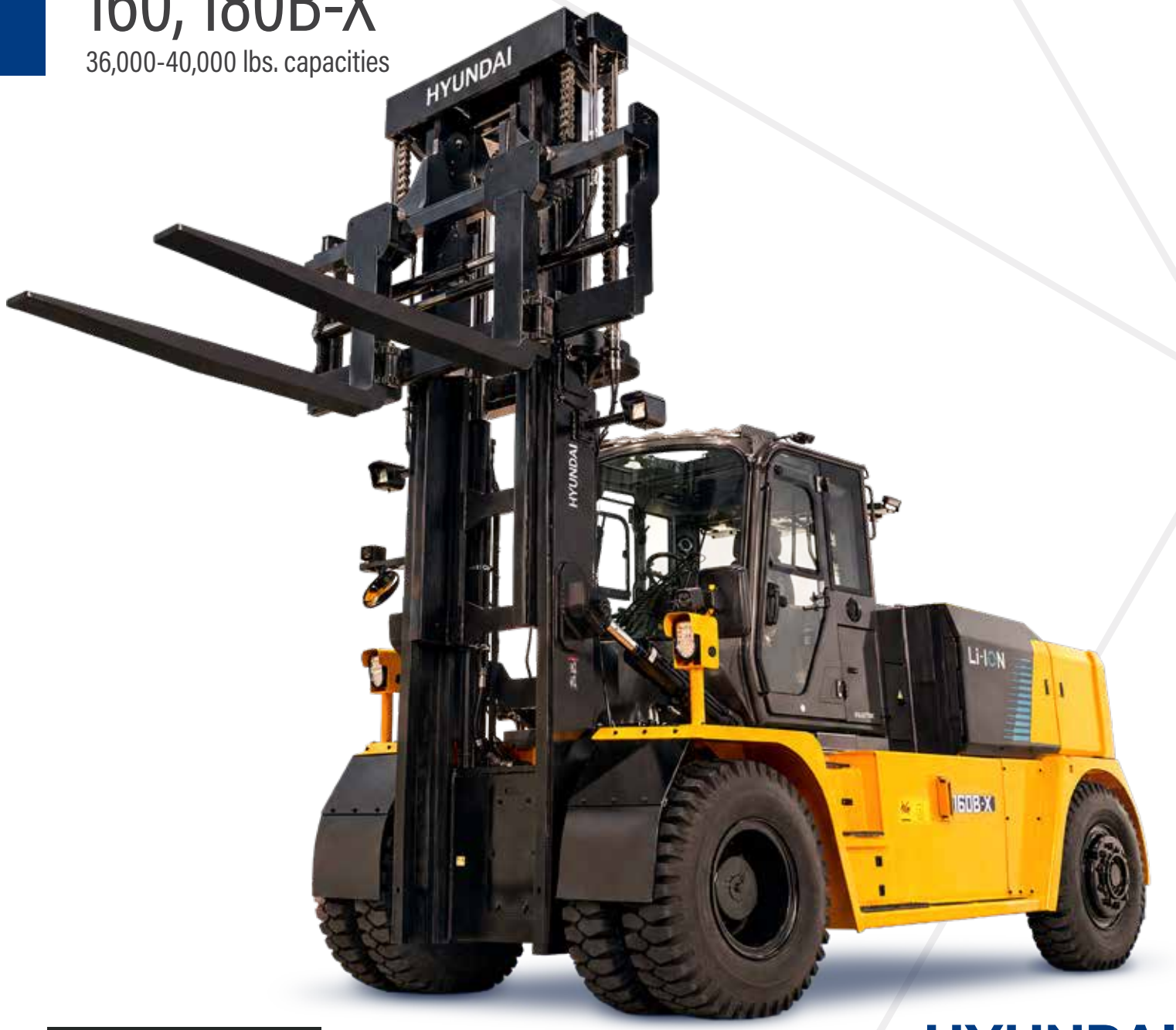

ELEVEX™
Material Handling Solutions

HYUNDAI
MATERIAL HANDLING
NO ONE DELIVERS MORE

Next-Generation Electric Power, A New Level of Innovation

THE NEXT GENERATION B-X



Engine-Class Performance

Equipped with a high-output drive system dedicated to large electric forklifts, the B-X Series delivers work performance comparable to large internal combustion (ICE) engine forklifts.

Extended Operating Time for Full-Day Productivity

With a high-performance battery and multiple charging solutions, the B-X Series can operate continuously for up to 12 hours on a single charge, ensuring uninterrupted productivity throughout the workday.

Built for Outdoor Durability

All major components, including the battery, are UL and CE certified for safety and reliability. Key components feature an IP67 waterproof rating, enabling stable operation even in harsh weather conditions.

Operator-Focused, Clean Working Environment

Designed with zero emissions, low noise, and low vibration, the B-X Series reduces operator fatigue while delivering a cleaner and more comfortable workspace.

Outstanding Service Accessibility

A tilting cabin and high-voltage shutoff system provide a safe maintenance environment. Backed by Hyundai Material Handling's professional service engineers, customers receive prompt and reliable support.

* ICE: Internal Combustion Engine
* UL: North American certification (Underwriters Laboratories), CE: European certification (Conformité Européenne)

ENERGY & PERFORMANCE

All the power and heavy-duty capability of large IC engine forklifts, now in electric.

The 160/180B-X models provide strong power and high work efficiency, ensuring stable performance in any operating environment.

Performance Equal to ICE Powered Models

Delivers outstanding operational performance in any environment with output equivalent to that of ICE powered forklifts.

Fork lifting / Lowering speed



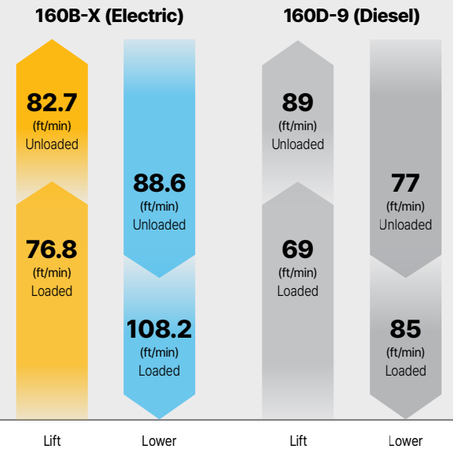

Travel speed



Loaded/Unloaded, mph

Gradeability

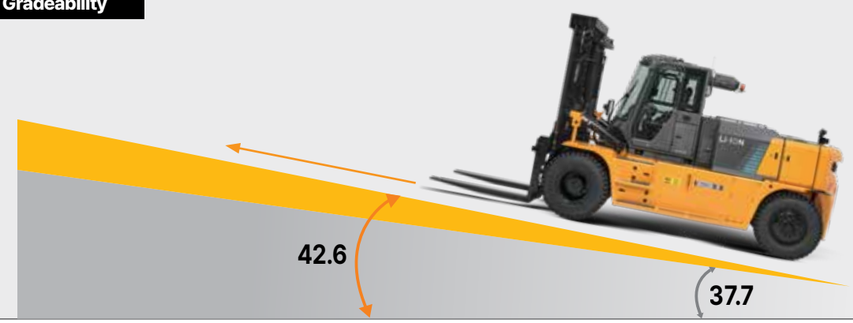

Max. Gradeability, Loaded (%)

160B-X (Electric) 160D-9 (Diesel)



Usable and storable outdoors even in wet weather

IP 67

Indicates that a machine is dust-tight and can be submerged in fresh water up to 1 meter (39") for 30 minutes without damage. This rating indicates a high level of protection against both dust and water ingress.

Water & dust protection ratings for major components

IP 69K

Indicates that a machine is completely dust-proof and can withstand high-pressure, high-temperature water jets, making it suitable for environments requiring rigorous cleaning (such as food processing and pharmaceuticals), as well as outdoor use in extreme conditions. This rating ensures that equipment can endure intensive wash-downs without damage.

Battery pack / Drive motor / Hydraulic motor /
Power distribution unit / Battery thermal management system

VCU (Vehicle control unit)

ENERGY

Charging Solutions for Enhanced Productivity and Run Time

The B-X Series runs for up to 12 hours with approximately 0.5 to 1.5 hours of charging, depending on conditions, maximizing field efficiency and minimizing downtime. field efficiency by minimizing downtime. (Based on 166kWh battery / 120kW charger configuration)

Safe Indoor or Outdoor Charging

With its IP54-rated water and dust protection, the charger can be installed outdoors and includes safety features to ensure stable charging under all conditions. In addition, the charger can be configured to charge four trucks sequentially.

※ Image is for illustrative purposes only.

Standard Lithium Battery Included



Comes equipped with high-performance lithium batteries for extended run time and fast charging, improving uptime and efficiency.

Battery Heating & Cooling System



Maintains optimal battery temperature regardless of external conditions, ensuring stable performance even in extremely hot or cold environments.

Battery Fire Suppression System



Real-time battery monitoring detects abnormal signals and controls charging/discharging, while activating automatic fire suppression systems as needed to ensure safety.

D/Axle & Hydraulic Oil Cooling System



Maintains optimal lubricant and hydraulic oil temperatures, preventing overheating and improving durability and efficiency.

Charging Solution & Battery Runtime Information

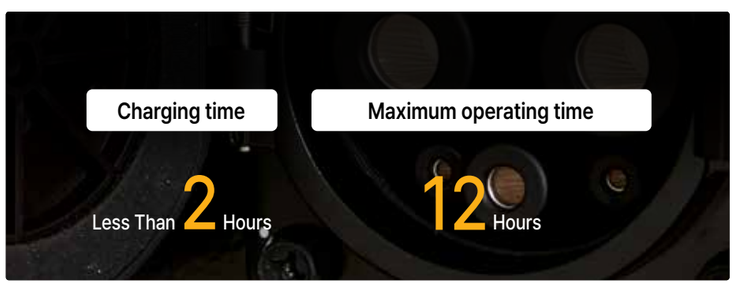

* Based on 166kWh battery option.
** Battery charging time and runtime may vary depending on operational conditions.

Forward View Mirror

A mast-mounted mirror improves visibility of the fork and load position for safer handling.

Large heated side mirrors

Heated mirrors give wide rear visibility for safe operation even in poor weather.



Adjustable Steering Column

Height and tilt of the steering column can be easily adjusted to fit any operator perfectly.

4.3" LCD cluster

Displays battery state-of-charge, temperature and warning lights, and allows mode and feature adjustments.

Dual brake pedals

Allows two-foot operation, with which IC operators are familiar.

Constant heating & Cooling

Provides maximum climate control performance regardless of coolant temperature.

12V socket & USB charger

Convenient power supply for accessories inside the cabin.

Intuitive Control Switches

Key function switches are positioned within easy reach of the operator.

Air suspension & Swivel seat

Enhances comfort with shock absorption.

CONVENIENCE

Ergonomic design with a range of driver-focused features creates the optimal environment for comfortable and efficient operation.



Driver Convenience Features for Easier Operation

Creep Mode (Optional)

Smooth low-speed movement without using the accelerator pedal while allowing precise movements and reducing operator fatigue.



Allows travel at 1.5mph without pressing the accelerator.

Auto Hold / Auto Parking

These functions enhance safety by automatically applying the parking brake when the forklift is stationary or the driver dismounts.



Auto hold: Automatically engages the parking brake when the brake pedal is held for more than four seconds.
Auto parking: Automatically engages the parking brake when the operator leaves the seat.

Anti-Rollback

Even on slopes, the system gently controls speed to prevent the forklift from rolling back, helping ensure safe stopping and restarting.



Always park on level ground when using this function for safety.

Drive Mode Selection

Operators can choose the most suitable driving mode depending on their preferences and working environment.



N (Normal)
Same acceleration feel as ICE forklifts

H (High)
Provides instant acceleration performance for fast task processing

E (Economic)
Smooth acceleration performance with energy efficiency

SAFETY

Along with great reliability, advanced safety systems help prevent accidents even in unexpected situations to create a safer industrial working environment.



Blue spot & Red zone (Optional)

Blue spot projects a blue light in front of the forklift, warning pedestrians ahead of approaching equipment. **Red zone** creates a visual safety boundary around the forklift using red lighting to help prevent accidents and protect everyone in the workplace.



Pedestrian detection system (Optional)

A smart safety-assist system is designed to prevent collisions between pedestrians and forklifts. When the camera detects a person nearby, the system highlights the surrounding area in yellow on the monitor, providing a clear visual warning to the operator.

MAINTENANCE

A design focused on ease of service and maintenance allowed for reliable long-term operation.



Cabin Tilting Switch





Superior Maintenance Accessibility

The cabin tilts up to 52 degrees, providing superior access for maintenance. Key components such as the powertrain, hydraulic and electrical systems are easily accessible ensuring excellent serviceability. From routine inspections to parts replacement, maintenance is quick, efficient and minimizes downtime.



High-Voltage Cable Safety Design

Bright orange insulation makes high-voltage lines easy to identify, while excellent insulation performance and protection against overheating and external impact ensure safe operation.





High-Voltage Battery Serviceability

Easy component access enables fast and safe maintenance. The Manual Service Disconnect (MSD) cuts off high-voltage power before servicing to ensure a safe work environment.



TCO

Total Cost of Ownership

Total cost of ownership (TCO) comparison : Next-gen electric model vs. ICE powered model

Estimated savings at year 10 : **Approx. $82,000**

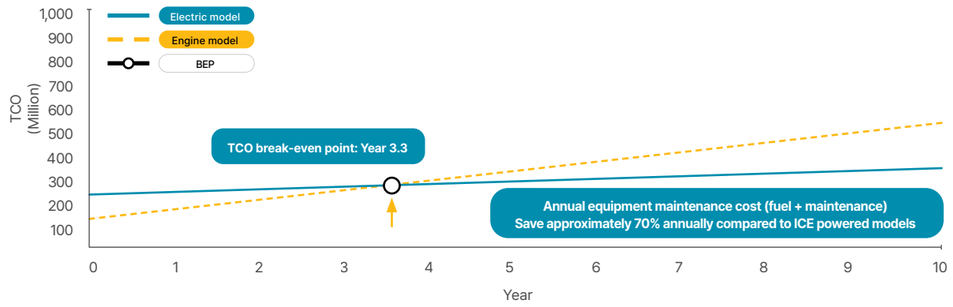

*Maintenance cost calculation based on 8 operating hours per day, 300 working days per year, standard configuration, with heater and A/C in use.

BUILT FOR YOUR INDUSTRY

Hyundai's High-Voltage B-X Series is designed for heavy-duty jobs across toughest industries.

Logistics & Ports

Built to manage high-intensity continuous operations like those at container yards and docks, the B-X maintains reliable performance even in harsh weather like heavy rain or snow.

- Regenerative braking minimizes brake wear during frequent stops and starts
- Waterproof design ensures stable operation against seawater splash and rain

*Core components are IP67-rated for water and dust resistance



Steel

Guarantees stable operation in dusty, high-temperature environments and is optimized for the repetitive handling of heavy metals such as coils, billets, and slabs.

- Creep function and dual brake pedals are optimal for precise control tasks
- Battery heating & cooling system ensures stable performance even in high temperatures



Lumber

Maintains reliable operation when transporting bulk materials even amid wood dust and rough terrain.

- IP67-rated key components prevent the ingress of dust and sawdust, reducing equipment damage and fire risk.
- Dedicated cooling system for the drive axle and hydraulics maintains performance during extended operations



Manufacturing

Zero-emission electric drive and low-noise design enable comfortable and unrestricted operation in mixed outdoor/indoor environments.

- Near-silent drive ensures clear verbal communication between workers and enhances safety
- Zero-emission, eco-friendly electric drive is optimal for indoor workspaces





A Data-driven Solution for Field Management

With the all-new Hi MATE, you can manage forklift fleets at your logistics site. Visualized data supports the development of management plans for improving safety, boosting productivity, and reducing costs on-site.

Fleet-Level Equipment Operation Management

- Real-time monitoring and post-operation management support by fleet, vehicle, and operator
- Provides operation efficiency, utilization trends, route tracking, fault alerts, and consumable status

Wireless Configuration and Software Update Support

- Remote configuration of key operational features and wireless software update capability

※ Supported models are being expanded

Enhanced Smartphone App

- Fleet and vehicle-level monitoring, remote settings, and work instructions
- Compatible with Galaxy (Android) and iPhone devices

External Communication & Authentication Device Compatibility

- Compatible with third-party communication terminals and operator authentication devices
- Supports basic features such as operation data management

New **B-X Series** (160/180B-X)

LOAD CURVE (160B-X)

2-Stage Mast : V330, V400, V500

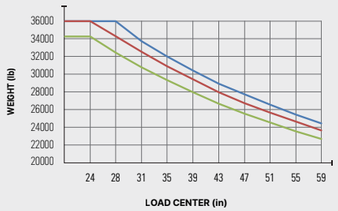

2-Stage Mast (Free lift) : TS450, TS500, TS600

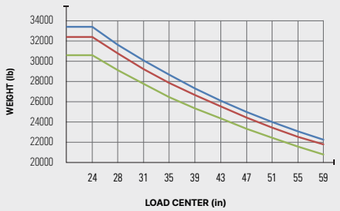

3-Stage Mast : VS330, VS400, VS500

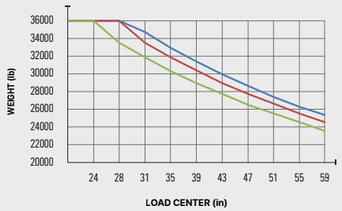

LOAD CURVE (180B-X)

2-Stage Mast : V330, V400, V500

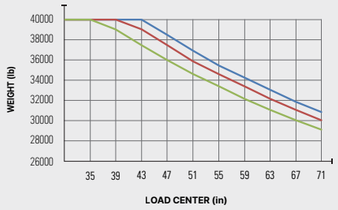

3-Stage Mast : TS460, TS508, TS600

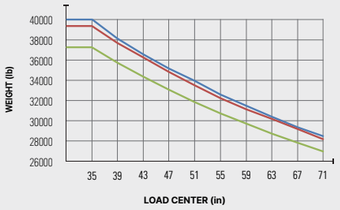

Mast Specifications (160B-X)

Mast Type		Overall Height (Lowered)	Maximum Fork Height	Free Lift	Tilt Angle		Load Capacity (General)				Truck Weight (Unload)
					FwD	Bwd	General		Intergral Side Shift with Fork Positioner		
							24 in LC	47 in LC	24 in LC	47 in LC	
		in	in	in	deg	deg	lb	lb	lb	lb	lb
2-STAGE LIMITED FREE LIFT	V300	128	119	0	15	12	36,000	32,050	32,050	27,200	45,009
	*V330	134	130	0	15	12	36,000	32,050	32,050	26,800	45,219
	V350	138	138	0	15	12	36,000	32,050	32,050	26,600	45,316
	V400	148	158	0	15	12	36,000	32,050	32,050	25,950	45,950
	V450	157	178	0	15	12	36,000	32,050	32,050	25,350	46,290
	V500	169	197	0	15	12	36,000	32,050	32,050	24,700	46,693
	V550	179	217	0	15	12	34,250	31,400	31,400	24,050	47,284
	V600	191	237	0	15	12	33,250	30,450	30,450	23,550	47,686
	V650	202	256	0	15	12	32,250	29,650	29,650	23,000	48,052
	V700	212	276	0	15	12	31,400	28,800	28,800	22,500	48,386
3-STAGE FULL FREE LIFT	VS300	126	119	61	10	10	36,000	32,050	32,050	28,100	44,167
	VS330	132	130	67	10	10	36,000	32,050	32,050	27,650	44,342
	VS350	136	138	71	10	10	36,000	32,050	32,050	27,450	44,484
	VS400	146	158	81	10	10	36,000	32,050	32,050	26,800	44,845
	VS450	156	178	91	10	10	36,000	32,050	32,050	26,300	45,408
	VS500	167	197	100	10	10	36,000	32,050	32,050	25,650	45,844
	VS550	177	217	110	10	10	34,350	32,050	32,050	25,000	46,271
	VS600	189	237	120	10	10	33,500	31,600	31,600	24,500	46,847
3-STAGE FULL FREE LIFT	TS450	116	178	59	10	10	33,400	31,900	31,900	24,350	47,317
	TS500	125	198	66	10	10	32,400	30,950	30,950	23,800	47,673
	TS550	131	217	72	10	10	31,300	29,950	29,950	23,050	48,058
	TS600	140	237	79	10	10	30,600	29,200	29,200	22,650	48,461
	TS650	146	257	85	10	10	29,750	28,350	28,350	22,100	48,805
	TS700	155	276	92	10	10	28,850	27,550	27,550	21,600	49,418
	TS750	161	296	98	10	10	28,100	26,800	26,800	21,050	49,734

Mast Specifications (180B-X)

Mast Type		Overall Height (Lowered)	Maximum Fork Height	Free Lift	Tilt Angle		Load Capacity (General)				Truck Weight (Unload)
					FwD	Bwd	General		Intergral Side Shift with Fork Positioner		
							35 in LC	47 in LC	35 in LC	47 in LC	
		in	in	in	deg	deg	lb	lb	lb	lb	lb
2-STAGE LIMITED FREE LIFT	V300	126	119	0	10	10	40,000	39,000	36,400	36,200	57,512
	V330	132	131	0	10	10	40,000	38,450	36,400	35,650	57,794
	V350	136	139	0	10	10	40,000	38,250	36,400	35,450	57,960
	V400	146	158	0	10	10	40,000	37,450	36,400	34,700	58,780
	V450	156	178	0	10	10	40,000	36,700	36,400	33,950	59,100
	V500	165	198	0	10	10	40,000	36,000	36,400	33,300	59,931
	V550	175	217	0	10	10	40,000	35,250	36,400	32,550	60,404
	V600	185	237	0	10	10	39,200	34,700	36,000	32,050	60,877
	V650	195	257	0	10	10	38,350	34,050	35,150	31,400	61,311
	V700	205	276	0	10	10	37,550	33,400	34,400	30,750	61,731
3-STAGE FULL FREE LIFT	*TS460	116	182	61	10	10	40,000	35,150	36,350	32,350	60,562
	TS508	122	200	66	10	10	39,350	34,800	36,000	32,050	60,942
	TS538	126	212	70	10	10	38,800	34,350	35,450	31,600	61,318
	TS568	130	224	74	10	10	37,900	33,600	34,600	30,850	61,522
	TS600	135	238	79	10	10	37,250	33,050	33,950	30,350	61,823
	TS658	142	259	86	10	10	36,350	32,400	33,150	29,700	62,252
	TS700	148	277	92	10	10	35,700	31,700	32,500	29,050	62,580

SPECIFICATIONS (160/180B-X)

Distinguishing Mark				
	Manufacturer		HD HYUNDAI XITESOLUTION	
	Model Designation		160B-X	180B-X
1.1	Drive : Electric (Battery or Mains), Diesel, Petrol, Fuel Gas		Elec.	Elec.
1.2	Type of Operation		Seated	Seated
1.3	Load Capacity / Rated Load	lb	36,000	40,000
1.4	Load Center Distance	in	23.6	35.4
1.5	Load Distance, Center of Drive Axle to Fork	in	32.1	39.3
1.6	Wheelbase	in	141.7	141.7
Weight				
2.1	Service Weight	lb	44,322	57,020
2.2	Axle Loading, Loaded Front/Rear	lb	71,833/7,762	87,715/8,988
2.3	Axle Loading, Unloaded Front/Rear	lb	23,250/21,072	27,099/29,921
Tire, Chassis				
3.1	Tires : Solid Rubber, Superelastic, Pneumatic, Polyurethane		P	P
3.2	Tire Size, Front		12.00-20-18PR	12.00 R20
3.3	Tire Size, Rear		12.00-20-18PR	12.00 R20
3.5	Wheels, Number Front / Rear (x = Driven Wheels)		4×2	4×2
3.6	Tread, Front	in	72.5	72.7
3.7	Tread, Rear	in	77.1	79.7
Dimensions				
4.1	Tilt of Mast/Fork Carriage Forward/Backward	deg	15/12	10/10
4.2	Height, Mast Lowered	in	133.9	116.1
4.3	Free Lift	in	-	53.5
4.4	Lift Height	in	130	182.4
4.5	Height, Mast Extended	in	197.2	238.0
4.7	Height of Overhead Guard (Cabin)	in	115.9 (117.5)	116.1 (117.7)
4.19	Overall Length	in	258.3	313.6
4.2	Length to Face of Forks	in	205.1	219.9
4.21	Overall Width	in	99.2	100.0
4.22	Fork Dimensions	in	3.5×7.9×53.1	3.9×9.8×96.5
4.24	Fork-Carriage Width	in	98.3	100
4.31	Ground Clearance, Below Mast, Loaded	in	9.8	9.6
4.32	Ground Clearance, Center of Wheelbase	in	12.3	12.3
4.34.1	Aisle Width for Pallets Crossways	in	293.5	348.9
4.34.2	Aisle Width for Pallets Lengthways	in	293.5	348.9
4.35	Turning Radius	in	199.6	205.3
Performance Data				
5.1	Travel Speed, Loaded / Unloaded	mph	19.1/21.4	21.4/22.9
5.2	Lift Speed, Loaded / Unloaded	ft/min	76.8/82.7	76.8/76.8
5.3	Lowering Speed, Loaded / Unloaded	ft/min	108.2/88.6	98.4/78.7
5.6	Max. Drawbar Pull, Loaded / Unloaded	N	34,171	32,165
5.8	Max. Gradeability, Loaded / Unloaded	%	42.6	32.3
5.10	Service Brake		Hydraulic Electric	Hydraulic Electric
Electric Motor				
6.1	Drive Motor Rating	kW	120	120
6.2	Lift Motor Rating at	kW	60×2	60×2
6.4	Battery Voltage, Nominal Capacity K5	V/Ah	618.2/268 (STD) 618.2/228 (OPT)	618.2/268 (STD) 618.2/228 (OPT)
6.5	Battery Weight (min./max.)	lb	4,068/4,971	4,068/4,971
Additional Data				
8.1	Type of Drive Control		AC	AC
8.2	Operating Pressure, System / Attachments	psi	3,046	3,046
8.3	Oil Volume for Attachments	GPM-US	44.2	44.2
8.4	Sound Level at the Driver's Ear According to DIN 12053	dB(A)	66.8/65.9	65.1/65.0

STANDARD / OPTIONAL FEATURES

Item		160B-X	180B-X
Battery & Charging	Battery 618.2V / 268Ah (166kWh)	●	●
	Battery 618.2V / 228Ah (140kWh)	○	○
	Outdoor Charger 40kW (3P 380~440V)	●	●
	Outdoor Charger 20 / 40 / 120kW	○	○
	Wall Outlet Charger 3.5 / 7 / 20kW	○	○
	Sequential Multi Charger	○	○
Operator Compartment	Cabin	●	●
	Cabin Upper Wiper	○	○
	Air Conditioner & Heater	●	●
	Radio / USB / Bluetooth	●	●
	Fabric Seat / Seat Belt / Armrest / Heated Seat	●	●
	Artificial Leather (Vinyl) Seat / Air Suspension / Swivel / Buckle	○	○
	Vehicle Fire Extinguisher (1.5 lb)	○	○
Mast	Tilt Angle: 15° / 12°	●	-
	Tilt Angle: 10° / 10°	○	●
	2-Stage V Mast (Standard) : 130 in	●	○
	2-Stage VS Mast (Free Lift) : 119 – 237 in	○	-
	3-Stage TS Mast (Free Lift) : 178 – 296 in	○	●
Fork	Fork Length	● (119 in)	● (131 in)
	Fork length (Option) 160B-X : 53~102in, 180B-X : 71~108in	○	○
Attachment	Fork Carriage (Standard)	●	●
	Fork Carriage (Sliding, Sliding & Holder, Integral Shaft Carriage)	○	○
	Side Shifter & Fork Positioner (SYN, IND)	○	○

Item		160B-X	180B-X
Control System	MCV (Main Control Valve) 5 Spool	●	●
	Fingertip Control	●	●
	Manual Lever	○	○
Tire	Pneumatic Tire	●	●
	Solid Tire	○	-
Safety	Rear Camera	●	●
	Pedestrian Detection System	○	○
	Heated Rearview Mirror	○	○
	Blue Spot (Front / Rear), Red Zone	○	○
	Seatbelt Interlock	○	○
	HYUNDAI CONNECT (Basic)	○	○
	HYUNDAI CONNECT (Premium)	○	○
Convenience	Auto Tilt	○	○
	Air Compressor	○	○
	Accumulator	○	○
	Load & Angle Sensor	●	●
	Under Cover	○	○
	Key Switch	○	○
	Travel Speed Limit	○	○
	Master Switch	●	●
	Hazard Lamp (Beacon Lamp)	●	●
	License Plate	○	○
	Wheel Bolt Protector	○	●
	Outdoor Charger Canopy	○	○
Oil	VG46	●	●
	Tropical, Cold Area	○	○

● STD / ○ OPT

DIMENSIONS

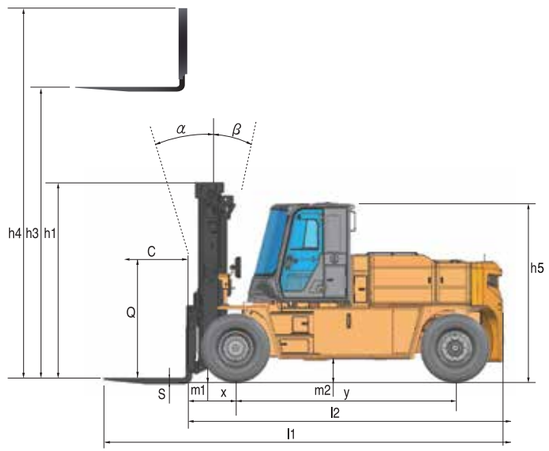

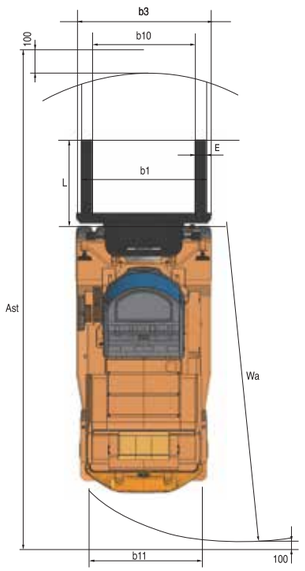

ELEVEX™
Material Handling Solutions

MONTREAL (Head office)
19151 A, Cruickshank Avenue
Baie-D'Urfé (Québec) H9X 3N9

Phone: 418 694-4223
Toll free: 1 866 421-4223
info@elevex.ca

SAGUENAY
2305, Alexis-Le-Trotteur
St. Jonquière (Québec) G7X 9H8

elevex.ca

NO ONE
DELIVERS MORE

HD HYUNDAI XITESOLUTION | MATERIAL HANDLING

6100 Atlantic Blvd.
Norcross, GA 30071
hyundaimaterialhandling.com

678-823-7777

2026. 07